THE IDEAL

INSTALLATION & SERVICING MANUAL

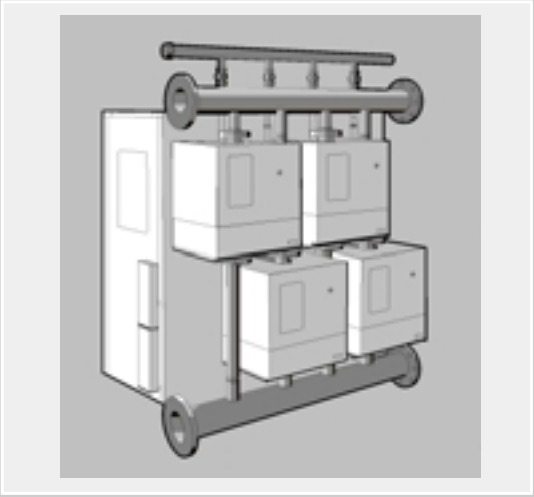

Super Plus

Modular Gas Fired Boilers

200/S, 200/2, 300/3, 400/4, 500/5, 600/6
&
300/3 Alternative, 400/4 Alternative

Installers guide to commercial central heating boilers

spares & parts online
IBASIS.co.uk©

iIdeal BOILERS

CAUTION. To avoid the possibility of injury during the installation, servicing or cleaning of this appliance, care should be taken when handling edges of sheet steel components.

Super Plus 200/S, 300/3, 400/4, 300/3 Alternative, 400/4 Alternative, 500/5 & 600/6
B.G. Certified - P.I. No. 87AP18
Destination Countries: GB & IE

CONTENTS

Assembly of Boiler 15

Boiler Description 5

Boiler Dimensions 9

Boiler House Clearances 8

Boiler Operational Requirements 3

Boiler Specifications 4

Combustion Data Sheet 26

Commissioning and Testing 16

Control Sequence Logic 23

Electrical Supply 13

Exploded Views

- **Boiler Assembly** 5
- **Electrical Controls** 6
- **Gas Line** 7
- **Module** 6

Fault Finding 24

Flue Requirements 10

General Information ..... 3 - 13

Installation ..... 14 - 18

Installation Requirements 7

Location 8

Replacement of Components 20

Safety Checks 17

Servicing Instructions 19

Servicing and Fault Finding ..... 19 - 24

Short List of Parts 25

Water Circulation System 12

Wiring Diagrams 14

INTRODUCTION

Gas Safety (Installation and Use) Regulations, 1994, amendments 1996 or rules in force.

It is the law that **all** gas appliances are installed and serviced by a CORGI registered installer (identified by ❀) in accordance with the above regulations. Failure to install appliances correctly could lead to prosecution. It is in your own interest, and that of safety, to ensure that the law is complied with.

BOILER OPERATIONAL REQUIREMENTS

The SUPER PLUS range of boilers is suitable for fully pumped open vented or pressurised central heating, indirect domestic hot water and combined systems.

WARNING: **In order to ensure safe, efficient and reliable operation of the boiler, particular attention should be made to the following points:**

1. The **Super Plus** incorporates an aluminium alloy heat exchanger. As part of the installation the central heating system should be thoroughly flushed with appropriate water treatment in order to comply with BS7593:1992.

   Under no circumstances should the boiler be fired before the system has been thoroughly flushed.

   Caradon Plumbing Limited recommend only the use of Femox or Betz Dearborn water treatment products, which must be used in accordance with the manufacturers instructions. For further information contact:

   Fernox, Fry Technology UK, Tandem House, Marlowe Way, Beddington Farm Road, Croydon. CRO 4XS, tel. 0870 5601 5000 - or - Betz Dearborn Ltd., Sentinel Division, Foundry Lane, Widnes, Cheshire WA8 8UD, Tel. (0151) 424 5351

   IMPORTANT : ANY OTHER TREATMENT FOR THIS PRODUCT WILL RENDER THE GUARANTEE OF CARADON PLUMBING LIMITED INVALID.

   Notes.

   If an inhibitor is used, and in hard water areas where treatment to prevent lime deposits is necessary, it is most important that the water treatment MUST be maintained at the correct concentrations recommended by the treatment manufacturer.

   Persons responsible for the continued operation of this boiler should be made aware of this requirement.

   If the boiler is installed in an existing system then any unsuitable water additives MUST be thoroughly drained.

   Artificially softened water must not be used in the system, under any circumstances.

   In old systems the fitting of a filter to the return pipework, in order to prevent debris reaching the heat exchanger, is essential.

2. The constant water flow rate through the boiler, within ±10% of that indicated in the data table, must be maintained at all times when any of the modules are operating. At these flow rates the hydraulic resistance is 98 mbar (39 in.w.g.) ±20%, irrespective of the size of the boiler.
3. Protection against circulating pump failure must be provided.
4. The chimney system must be double skinned, or single wall lined and insulated with the equivalent of 50 mm (2") of mineral wool, aluminium covered. A drainage point must be provided.

GENERAL

Boiler Model No.		200/S	300/3	400/4	300/3 Alternative	400/4 Alternative	500/5	600/6
No. of Modules		2	3	4	3	4	5	6
Heat Output	kW Btu/h x 10^3	200 682.4	300 1023.6	400 1364.8	300 1023.6	400 1364.8	500 1706.0	600 2047.2
Heat Input	kW Btu/h x 10^3	235 802.9	353 1204.4	471 1607.0	353 1204.4	471 1607.0	588 2006.2	706 2408.8
Gas Rate (Note 1)	m^3/h ft^3/h	22.1 778.8	33.1 1168.0	44.2 1558.7	33.1 1168.0	44.2 1558.7	55.1 1945.8	66.2 2336.4
Flue Gas Volume at 100°C, 8.5% CO_2	l/s ft^3/min	109 231	164 397	218 463	164 347	218 463	273 578	327 694
Required Water Flow Rate (+/-10%)	l/s gal/min	4.3 56.8	6.5 85.2	8.6 113.6	6.5 85.2	8.6 113.6	10.8 142.0	12.9 170.4
Hydraulic Resistance	mb (in.w.g)	98 (39)	98 (39)	98 (39)	98 (39)	98 (39)	98 (39)	98 (39)
Min. Static Head (Note 2)	m (ft)	1.6 (5)	1.6 (5)	1.6 (5)	1.6 (5)	1.6 (5)	1.6 (5)	1.6 (5)
Max. Static Head	m (ft)	60 (197)	60 (197)	60 (197)	60 (197)	60 (197)	60 (197)	60 (197)
Electricity Supply		Nominal 230 V, 50 Hz, Single Phase. Max start current 1.9 A per module						
Max. Running Power	W	400	600	800	600	800	1000	1200
Min. Gas Supply Pressure (Note 3)	mb in. w.g	14.6 5.8	14.8 5.8	15.1 6.1	14.8 5.9	15.1 6.1	15.5 6.2	16.0 6.4
Boiler Height - overall	mm in	1800 71	1900 74.8	1900 74.8	1900 74.8	1900 74.8	1900 74.8	1900 74.8
Boiler Width - overall	mm in	910 35.8	1510 59.5	1510 59.5	2115 83.25	2115 83.25	2115 83.25	2115 83.25
Boiler Depth - overall	mm (in)	990 (39)	990 (39)	990 (39)	990 (39)	990 (39)	990 (39)	990 (39)
Weight of casing	kg lb	134 296	144 318	144 318	208 459	208 459	208 459	208 459
Weight of Each Module	kg lb	69.2 152.5	69.2 152.5	69.2 152.5	69.2 152.5	69.2 152.5	69.2 152.5	69.2 152.5
Weight of Water Header	kg lb	16.3 36	38.2 84.2	38.2 84.2	49.8 109.8	49.8 109.8	49.8 109.8	49.8 109.8
Weight of Gas Header	kg lb	3.5 7.7	9.4 20.7	9.4 20.7	12.6 27.7	12.6 27.7	12.6 27.7	12.6 27.7
Water Content (excluding header)	l gal	19.8 4.4	29.7 6.5	39.6 8.7	29.7 6.5	39.6 8.7	49.5 10.9	59.4 13.1
Weight of Dry Boiler	kg lb	308.5 681.2	437.4 964.3	506.6 1116.9	437.4 1964.3	506.6 1116.9	666.2 1468.7	735.4 1621.3
Weight of Wet Boiler	kg lb	328.3 724.9	466.9 1029.3	546.1 1203.9	466.9 1029.3	546.1 1203.9	715.6 1577.7	794.6 1752.3
Flow and Return Connection (Note 4)	mm in	65 2.5	125 5	125 5	125 5	125 5	125 5	125 5
Gas Connection	Rc (in. BSP)	40 (1.5)	2 (2)					
Flue Pipe Size (nominal bore)	mm in	250 10	350 14	350 14	450 18	450 18	450 18	450 18
Flue Socket Size (Note 5)	mm in	288 11.3	401 15.8	401 15.8	500 19.7	500 19.7	500 19.7	500 19.7
Burner Injector Size	mm (in)	12.0 (0.47)	12.0 (0.47)	12.0 (0.47)	12.0 (0.47)	12.0 (0.47)	12.0 (0.47)	12.0 (0.47)
Main Burner Pressure	mbar (in.w.g)	2.7 (1.1)	2.7 (1.1)	2.7 (1.1)	2.7 (1.1)	2.7 (1.1)	2.7 (1.1)	2.7 (1.1)
Fan Motor		Type BCP 1506E : 230 V, 50 Hz, Single Phase, 75W, '06' rating						
Gas Type		I_{2H}						

Notes:

1. *Flue gas volumes and gas rates are calculated using a C.V. of 1031 Btu/ft³ (at 15°C & 1013.25 mb)*
2. *For further information on head requirements see page 6.*
3. *The minimum gas supply pressure is with all modules firing.*
4. *Flange size: refer to BS.4504 Pt.1*
5. *Flues to BS.835 will fit directly onto the 300/3 Alternative, 400/4 Alternative, 500/5 and 600/6 boilers. For all boilers single skin and metal flues may need a suitable adapter. Further advice may be obtained from Caradon Plumbing Ltd.*

5. The chimney draught must be controlled between neutral and 0.2mbar (0.08 in.w.g.).
6. Boilerhouse cleanliness is important and concrete floors should be sealed to keep dust to a minimum. Contamination of the air supply with chlorides should be avoided.

Regular maintenance by competent personnel is essential to the safe and reliable operation of the boiler. Full details of these requirements are given in these Installation & Servicing Instructions.

BOILER DESCRIPTION

Each boiler consists of the following packs:

(a) The insulated stainless steel casing with flue outlet, condensate drain, wiring centres and wiring harnesses and for 300/3 or 500/5 boilers only, blanking kit.

(b) Boiler modules.

(c) Gas header, flow and return water headers and module fixing packs.

(d) Extra blanking kit and support bracket kits for the 300/3 Alternative and 400/4 Alternative boilers only.

Note: *The 300/3 Alternative and 400/4 Alternative are sold with a view to later upgrading.*

MODULE DESCRIPTION

The module can be subdivided into 3 main elements:

(a) The heat exchanger consisting of finned aluminium tubes expanded into cast aluminium tube plates. The bottom cover plate is cast aluminium. The top cover plate is cast iron, fitted with cast iron flow and return elbows.

(b) The gas line which supplies and regulates the gas flow to the main burners.

(c) The controls assembly which incorporates the fan (supplying air for combustion) and the electrical controls.

The normal mode of operation of the boiler (described below) is preceded in certain conditions by a phase in which the complete boiler casing is given a 5-volume air change. This air change is an important safety feature of BS.5978 and will occur whenever the boiler goes from a situation of no modules firing to a situation of one module firing. This includes morning start-up and those occasions of low load when the last module firing goes off on its thermostat (or external controls) and is then called again. The air change will NOT occur if one or more modules are firing and a further module is called.

The 5-volume air change phase operates as follows:

All the module fans are energised and run for approximately 70 seconds. At the end of this period all the fans are switched off except for that on the module being called which then immediately enters its 35 second, pre-purge period, (see Fig. 20).

When the electronic control thermostat calls for heat, the fan is switched on and purges the combustion chamber for approximately 35 seconds. At the end of this period the ignition sequence starts:

The spark generator is energised and delivers a spark to the main burner and at the same time the main gas valves are opened.

Once the flame is sensed and proved by the flame detection probe, the controls keep the main gas valves open until the control thermostat is satisfied.

The module is protected against blockage of burner, heat exchanger, flue or fan by the pressure switch. This senses the differential pressure between the pressure in the fan housing and the suction in the venturi casting, preventing the ignition sequence starting or causing safety shut down should the pressure be outside the design limits. After combustion, the products flow past the finned aluminium tubes, and through the gas distribution screen into the boiler casing, transferring heat to the water flowing through the tubes.

Each module is connected in parallel across the flow and return water headers, so that water is flowing through all the modules at all times.

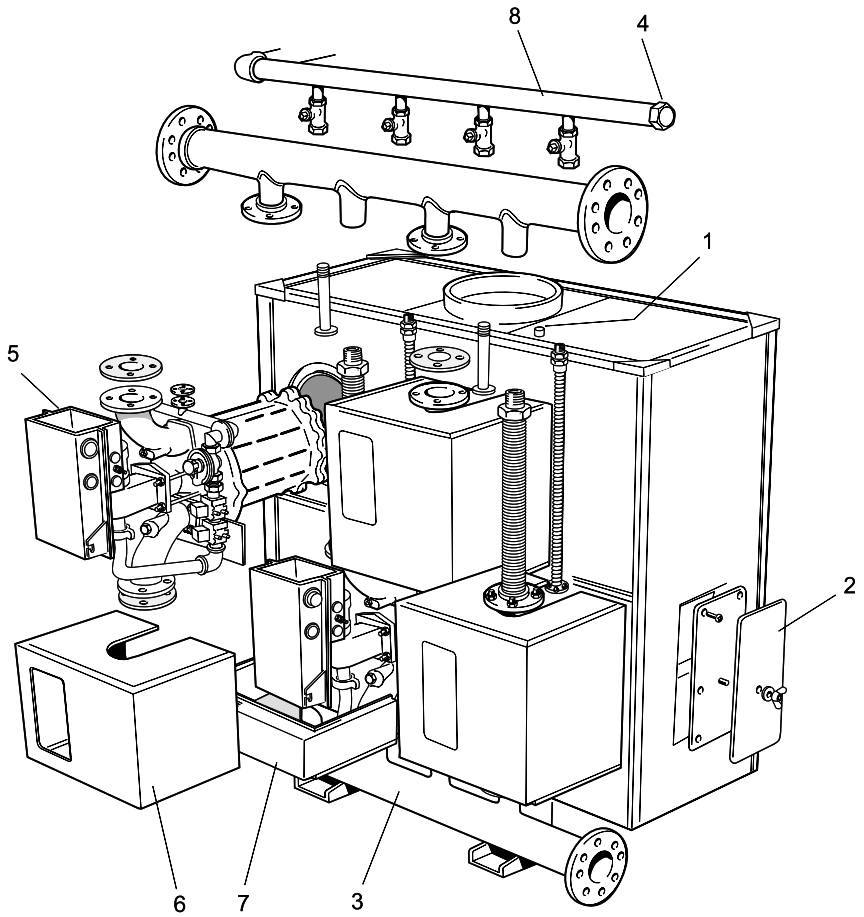

LEGEND

1. Flue test point
2. Water header
3. Gas pressure test point
4. Module
5. Module upper cover
6. Module lower cover
7. Gas header

Fig.1 Boiler Assembly - Exploded View

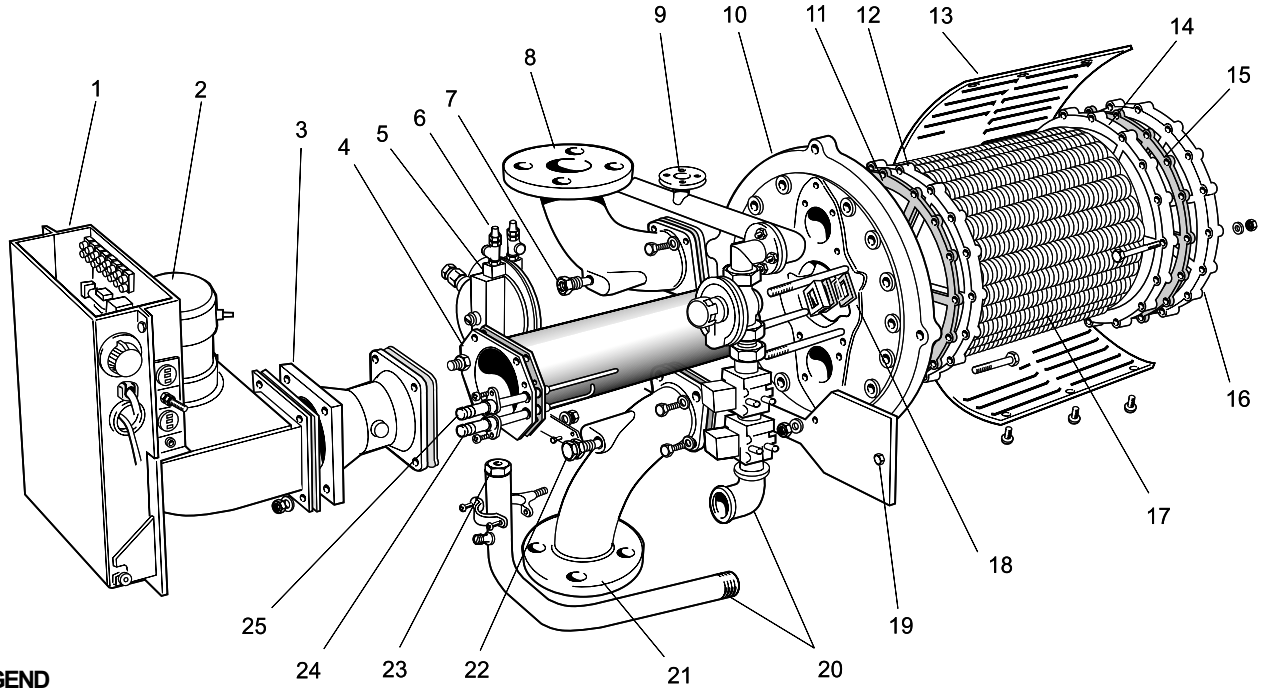

LEGEND

1. Controls box assembly
2. Fan motor
3. Venturi and gaskets
4. Pressure switch
5. Pressure switch test connections
6. Overheat thermostat pocket
7. Water flow elbow
8. Gas inlet flange
9. Cast iron top cover plate
10. Cast iron top cover plate gasket
11. Aluminium top tube cover
12. Gas distribution screen
13. Aluminium finned tube heat exchanger
14. Aluminium bottom tube plate
15. Bottom cover plate gasket
16. Aluminium bottom cover plate
17. Module lower cover fixing screw
18. Sight glass assembly
19. Main gas line
20. Water return elbow
21. Module thermostat pocket
22. Burner
23. Spark electrode
24. Flame sensing electrode and lead
25. Main gas injector

Fig.2 Module - Exploded View

LEGEND

1. Module electrical plug
2. LED grommets
3. PCB No.9B
4. Control thermostat potentiometer
5. PCB No.12
6. Flame sensing head
7. Main gas valve leads
8. Fan motor
9. Pressure switch connections
10. Fan connections
11. Spark/sensing
12. Fan rotor
13. Fan housing
14. Spark generator
15. Overheat thermostat capillary
16. Main thermostat sensor
17. Lockout reset button
18. Control thermostat knob

Detail of Pressure Switch Connection (Ref.9)

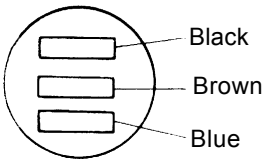

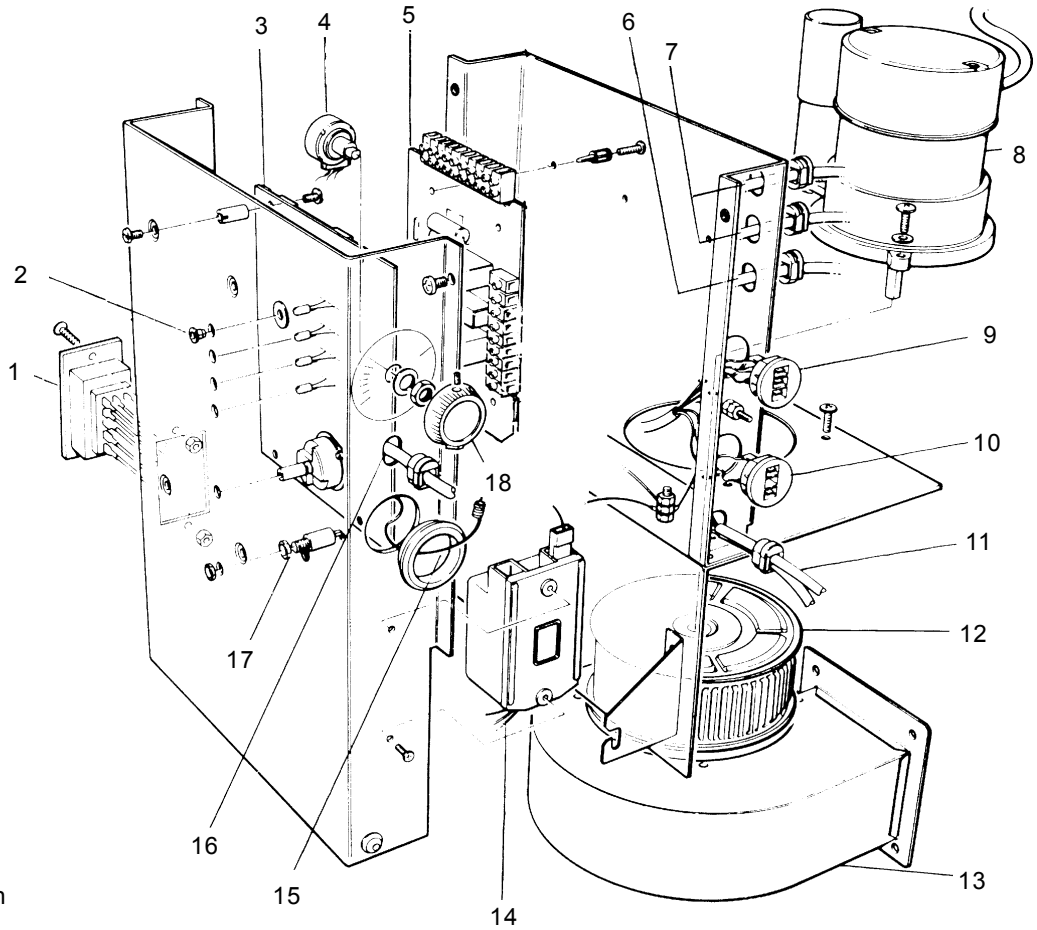

Fig.3 Electrical Controls - Exploded View

LEGEND

1. Main gas pressure test point
2. Main gas injector
3. Pressure switch electrical leads
4. Pressure switch
5. Pressure switch pressure pipe
6. Pressure switch suction pipe
7. Pressure switch test points
8. Gas manifold flange connection
9. Main gas governor
10. Main gas valve pressure test point
11. Main gas valves

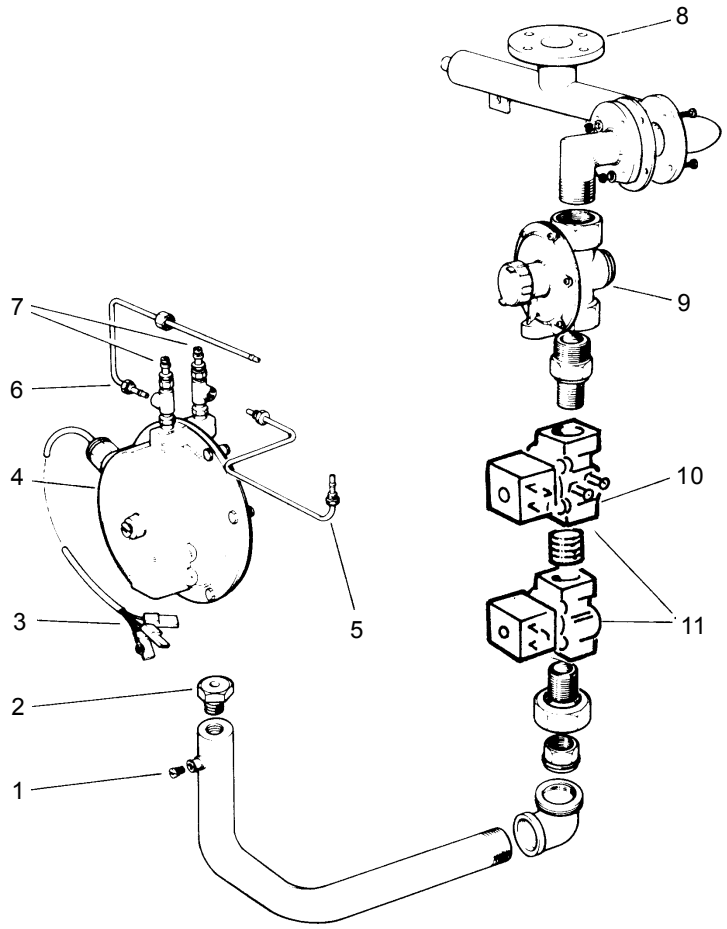

Fig.4 Gas Line - Exploded View

Super Plus boilers provide good load-matching sequence control by the following method:

As the load on the boiler decreases so the return water temperature increases.

Each module is fitted with an electronic thermostat capable of being set to within 0.5°C and these thermostats sense the return water temperature. Once the return temperature reaches 71°C the modules are set to switch off at intervals, to maintain the flow at approx. 82°C.

The modules switch off from left to right and from top to bottom thus the top left module is always the first to switch off and the bottom right the last.

The sequence control wiring centre gives a step-start operation of the boiler.

The modules are allowed to fire only in sequence, starting from right to left and bottom to top so that the bottom RH module is the first to fire and the top LH is the last. This step-start prevents excessive load on gas or electricity supplies.

The wiring centre provides facilities for wiring remote indicators/ alarm of 'Bumer On', 'Lockout' and 'Overheat' for up to 6 modules.

Provision is also made for main supply and direct connection of any interlock devices such as the water flow system.

INSTALLATION REQUIREMENTS

Gas Safety (Installation & Use) Regulations 1994, amendment 1996 or rules in force.

It is the law that **all** gas appliances are installed and serviced by a CORGI registered installer (identified by ❀) in accordance with the above regulations.

Failure to install appliances correctly could lead to prosecution. It is in your own interest, and that of safety, to ensure the law is complied with.

In addition the installation must comply with the relevant British Standard Specifications and Codes of Practice, viz;

CP 341:300-367 Central Heating by Low Pressure Hot Water.

BS 6644 Installation of Gas Fired Hot Water Boilers of Rated Inputs Between 60kW and 2mW.

CP 341:300-367 Central Heating by Low Pressure Hot Water.

IM/2 Purging Procedures for Non-domestic Gas Installations.

IM/11 Flues for Commercial and Industrial Gas Fired Boilers and Air Heaters.

IM/16 Guidance for Installation of Gas Pipework Boosters and Compressors for Customers Premises.

IM/22 Installation Guide for High Efficiency Condensing Boilers (Industrial and Commercial Appliances)

Note. *The* ***Super Plus*** *is a partially condensing boiler: the condensate drain should be run in accordance with IM/22.*

IM/5 Soundness Testing Procedures for Industrial and Commercial Gas Installations.

CP 331:3 Centralised Hot Water Supply.

The installation must also conform to current building regulations, any requirement of the local authority health and safety executive, gas region, insurance companies and the Health and Safety at Work Act 1985.

All wiring must conform to IEE (BS7671) Regulations for the electrical equipment of buildings.

LOCATION

The floor must be flat, level and capable of supporting the weight of the WET boiler pipework. In addition, concrete floors must be sealed. The siting of the boiler must be in accordance with the guidance given in BS.6644 and with reference to minimum boilerhouse clearances - refer to Fig. 5.

Inflammable materials MUST NOT be placed in close proximity to the appliance. Materials giving off flammable vapours MUST NOT be stored in the same room as the appliance.

Note: *Headroom must be the boiler height (Table 1) Plus any pipework and flue requirements*

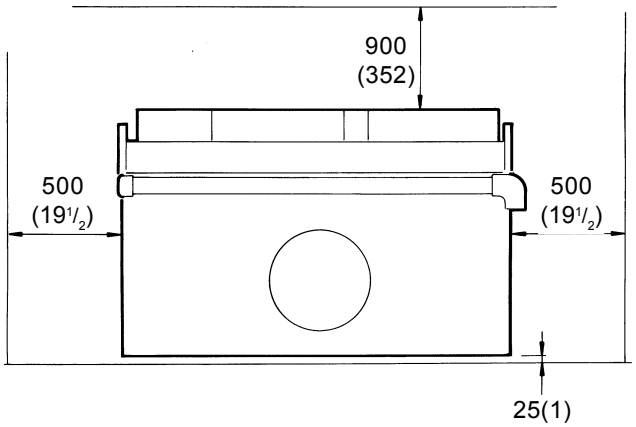

Fig.5 Recommended Boiler House Clearances for Comfortable Servicing Access (Plan View)

CONNECTION TO GAS SUPPLY

The gas installation MUST be in accordance with the requirements of the local gas region (refer also to CP 331:3 and CP 332:3 where applicable).

The gas supply must be capable of maintaining a minimum pressure as indicated in Table 1, measured at the inlet to the boiler, with all modules firing (gas consumption is given in Table 1.) Static inlet pressure should not exceed 50 mb.

The boilers are for use with NATURAL GAS ONLY.

FLUE REQUIREMENTS

Open flue, induced draught and fan diluted systems may be used but must comply with the following basic requirements:

1. A draught diverter MUST NOT be fitted.
2. A draught stabiliser MUST be fitted to all types of flue systems and set to control the draught in the casing between neutral and 0.2 mbar (0.08 in.w.g.) irrespective of flue height or number of modules firing. (see Figs. 6 and 7 for further guidance).
3. ALL flue systems must be insulated and/or lined and impervious to acid condensate. Prefabricated chimneys must have a 'U' value of no greater than 1.4 W/m^2 °C at 540 °C (0.25 Btu/h ft^2 °F at 1000°F).
4. Drainage must be provided at the base of the chimney or liner. (All boiler casings have a condensate drain point - see Fig. 17)
5. For fan diluted or induced draught systems, air flow/pressure switches MUST be fitted to protect against fan failure. Switches should be set to open if the air flow reduces by more than 15%.
6. Flue products must not be allowed to enter the boilerhouse or adjacent buildings.
7. Refer also BS.6644 and to the British Gas Publication IM/11 - 'Flues for Commercial and Industrial Gas Fired Boilers and Air Heaters' and IM/22 for further guidance.

AIR SUPPLY

Detailed recommendations for air supply are given in BS.5440:2 which MUST be consulted before proceeding.

Contamination of the air supply from any external source must be avoided - with particular reference to dust, insulation debris, and flue products and concrete floors must be sealed. If any work is to be carried out in the boilerhouse which is likely to generate dust (e.g. structural alterations or lagging pipework), it is recommended that the boiler be shut down and the modules covered with a dust sheet, otherwise the boiler may require cleaning and servicing.

1. In particular the contamination of the air supply with chlorides must be avoided as they will cause the deterioration of the aluminium heat exchanger.
2. The boiler requires ventilation openings at BOTH high and low levels, direct from outside, and allowance MUST be made for stabiliser dilution in all cases.
3. Mechanically forced ventilation systems must include provision for boiler shut down in the event of fan failure.
4. High speed air streams within the boilerhouse must be avoided.
5. Extraction mounted ventilation fans alone are NOT permitted.
6. The minimum effective areas of the permanent air vents direct from the outside by natural ventilation are as follows:

   Low level

   540 cm^3 + 4.5 cm^3/kW in excess of 60 kW total rated input.

   High level

   270 cm^3 + 2.25 cm^3 /kW in excess of 60 kW total rated input
7. The minimum air requirements by mechanical ventilation are as follows:

   Table 2

Mechanical ventilation flow rates		
Type of boiler	Flow rate per 1000kW total rated heat input	
	Inlet air (Combustion ventilation)	Extract air(ventilation)
Forced/induced draught boilers	0.9m^3/s	0.6m^3/s

A purpose designed flueing ventilation system based solely on a high level permanent opening to an otherwise sealed boiler-house or compartment may be used, provided that specialist advice is taken and that the combustion air and ventilation requirements of the boiler is provided in line with BS.6644. In addition this boiler house temperature must be prevented from exceeding 32 °C.

INDUCED DRAUGHT

Insulated ductwork & stack

Note: *The discharge from both types of system MUST not allow recirculation of combustion products into the boilerhouse or adjacent buildings.*

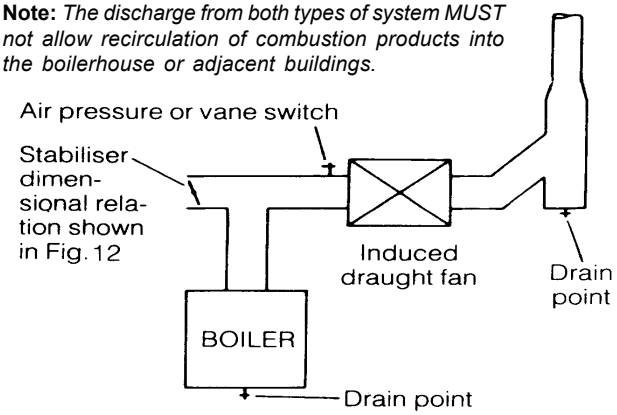

'FAN DILUTED FLUE (FDF)' SYSTEM

Note: *Air intake and discharge should be on the same outside wall face. Design must comply with British Gas requirements - refer P7 and IM/11.*

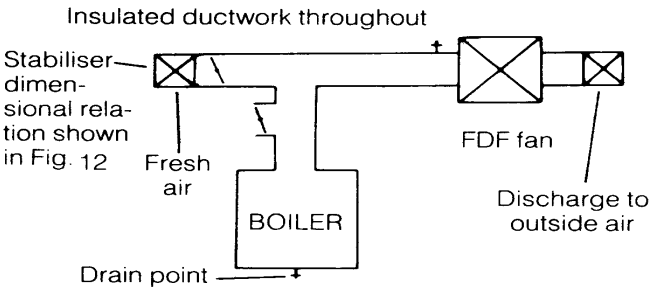

Fig.6 Application of Draught Stabiliser

All dimensions in mm (in)

Note: *The discharge from both types of system MUST not allow recirculation of combustion products into the boilerhouse or adjacent buildings.*

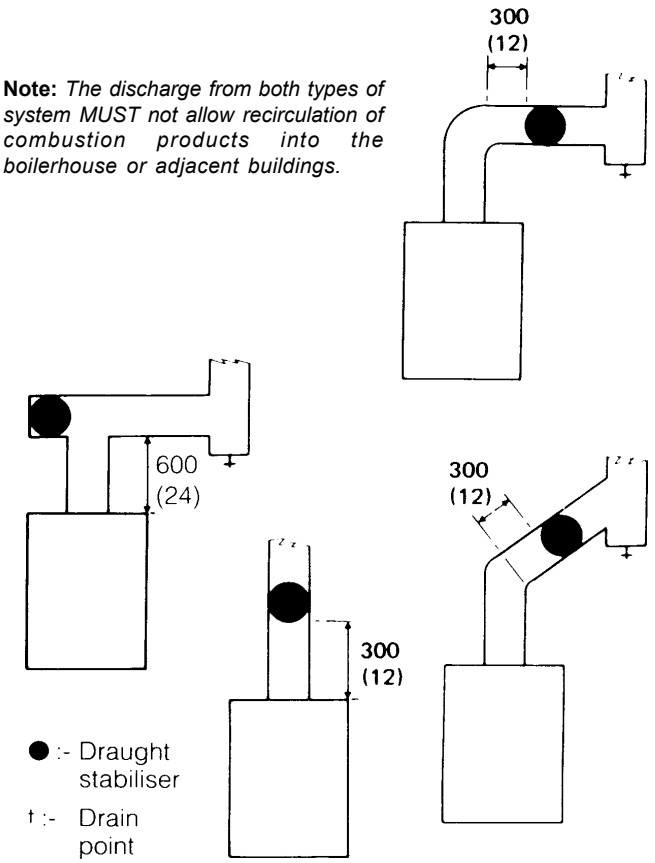

Fig.7 Flueing - General Guidance

All dimensions in mm (in)

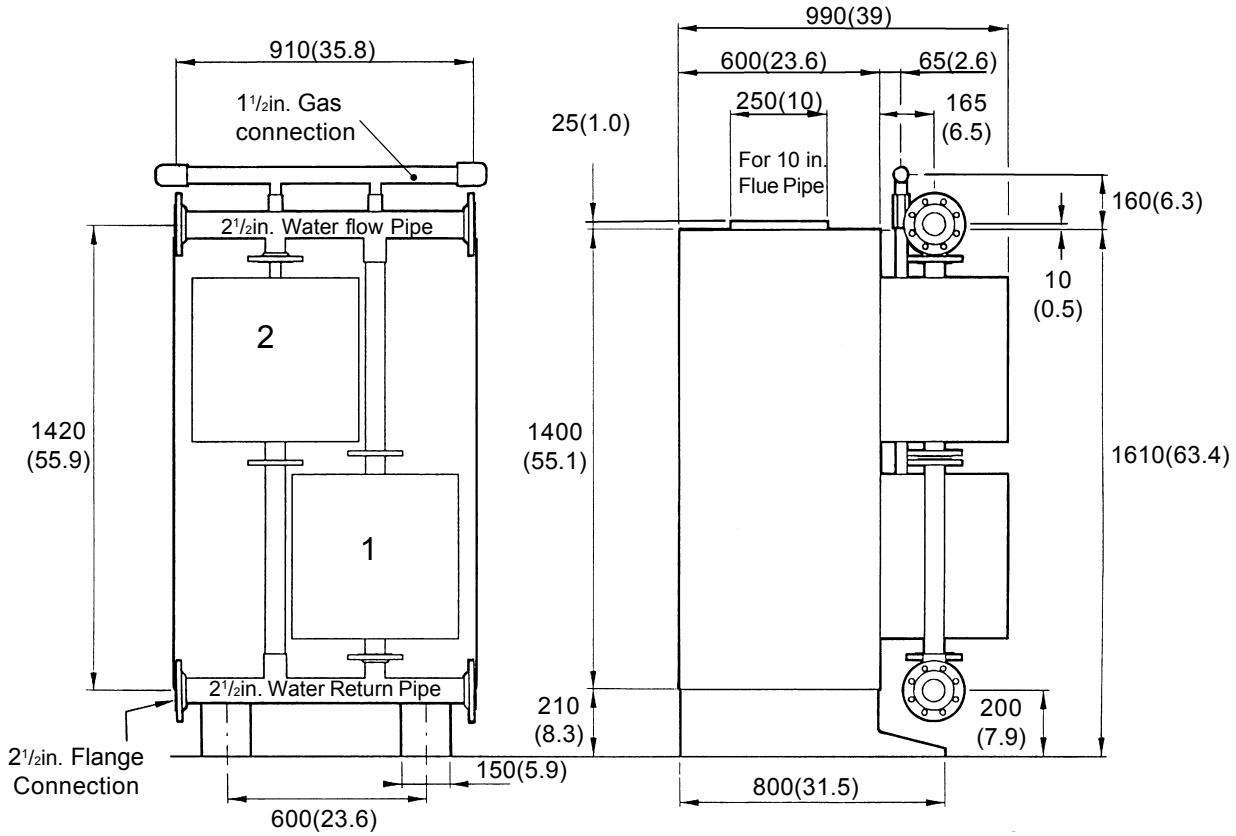

Fig.8 BOILER DIMENSIONS - SUPER PLUS 200/S boiler only

SUPER PLUS 400/4 Boiler shown

All dimensions in mm (in)

Note: *On 300/3 Module 1 is blanked off*

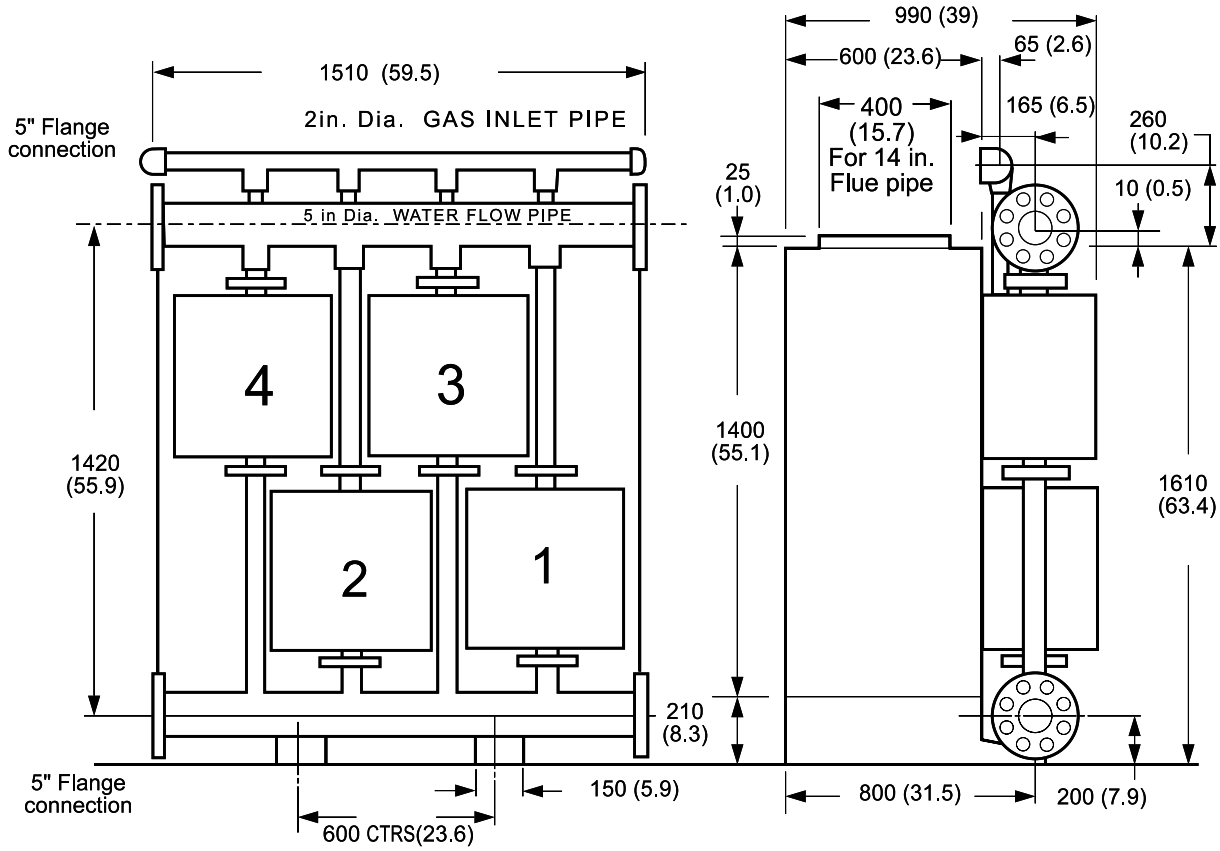

Fig.9 BOILER DIMENSIONS - SUPER PLUS 300/3 & 400/4 boilers only

SUPER PLUS 600/6 Boiler shown

All dimensions in mm (in)

Note: On 500/5 Module 1 is blanked off

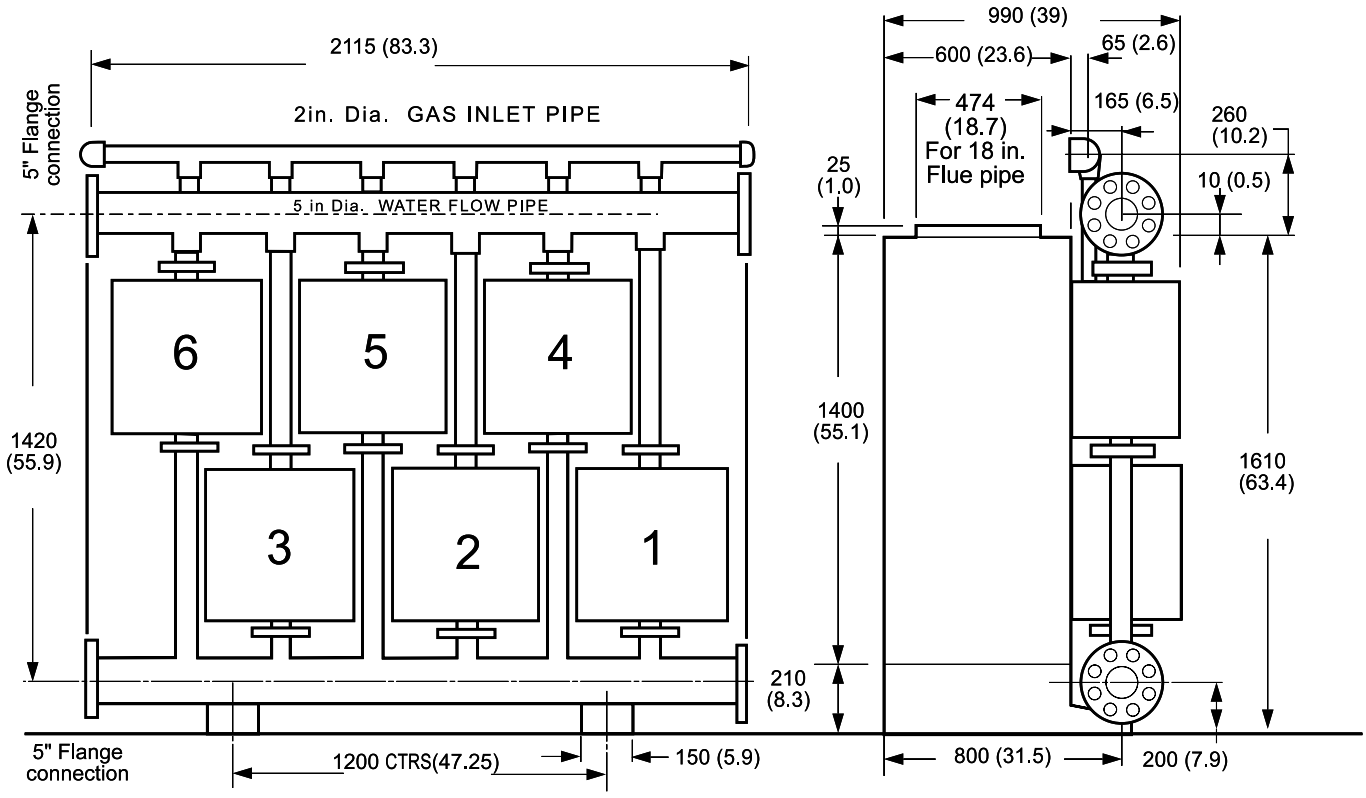

Fig.10 BOILER DIMENSIONS - SUPER PLUS 500/5 & 600/6 boilers only

All dimensions in mm (in)

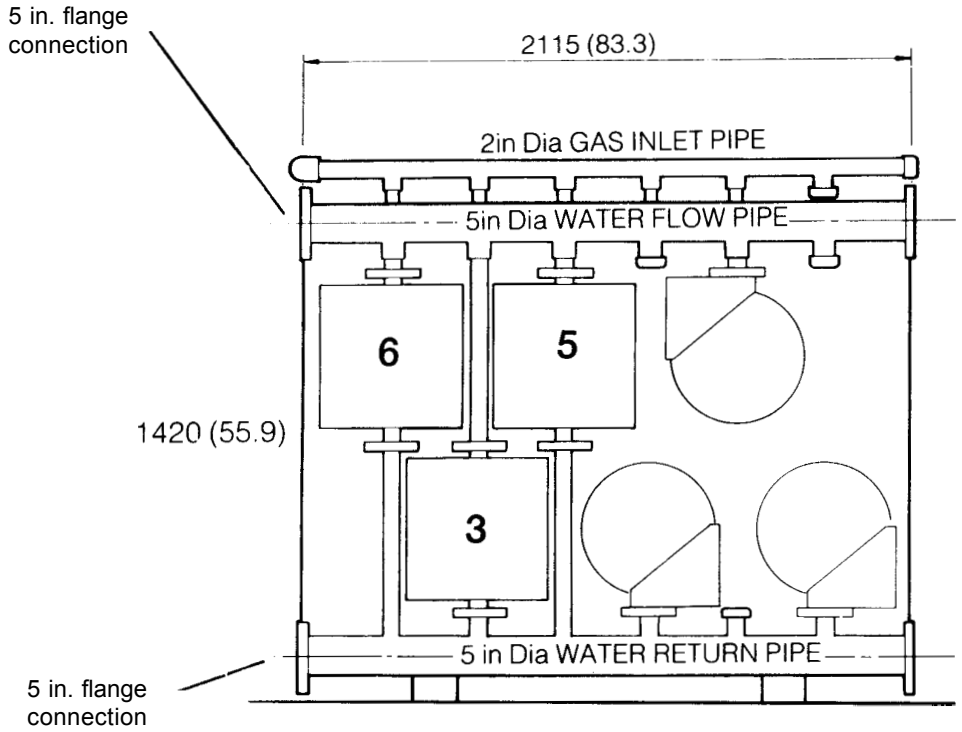

Fig.11 Module Arrangement - Super Plus 300/3 alternative

All dimensions in mm (in)

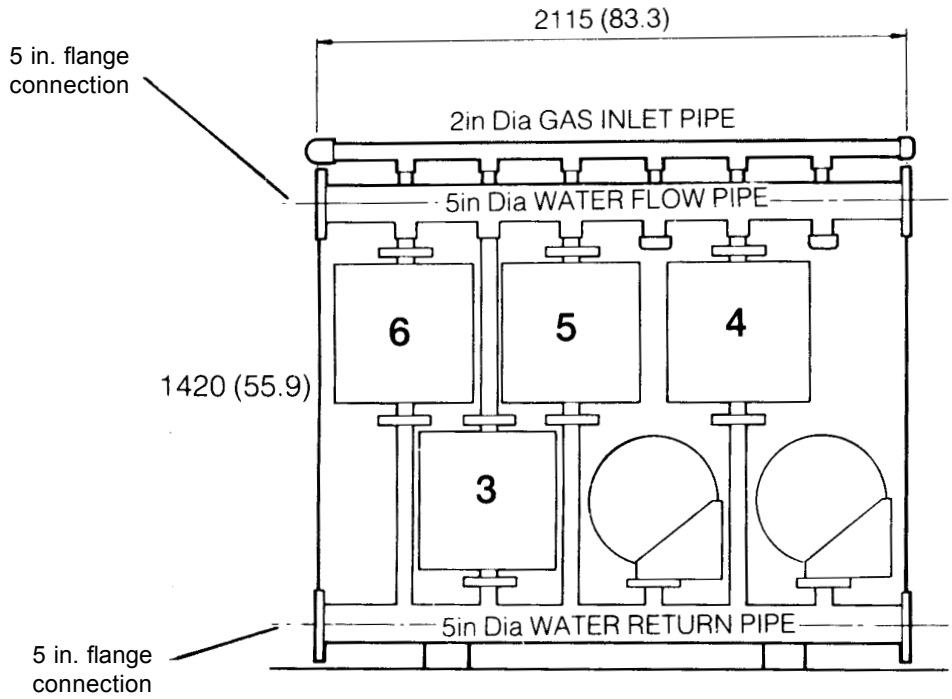

Fig.12 Module Arrangement - Super Plus 400/4 alternative

WATER CIRCULATION SYSTEM

DESIGN REQUIREMENTS

SUPER PLUS Gas Boilers are intended for use in conjunction with FULLY PUMPED, OPEN VENTED OR PRESSURISED systems, subject to the requirements below. They are *NOT SUITABLE* for use on gravity circulation systems.

Water flow rate:

28.4 gal/min (2.15 l/s) ± 10% through each module. Thus a 6 module boiler (**Super Plus 600/6**) requires 170.4 gal/min (12.9 l/s) volume flow rate.

Note:*Failure to maintain this flow rate will result in operation of the module overheat thermostat.*

Any other method of installation should be discussed with Caradon Plumbing Ltd. before proceeding.

Hydraulic Resistance:

When operating at the correct volume flow rate given above, the Hydraulic Resistance of all Super Plus boilers is 98 mb (39 in.w.g.) ± 20%.

Pump Overrun:

A pump overrun time of 30 seconds minimum must be allowed for on plant shutdown.

Maximum Static Head:

60.0m (197 ft.), i.e. maximum operating pressure 6.0 bar (85 lb/in^2).

Minimum Static Head

Minimum static head requirements for open vented systems must comply with boiler design characteristics, pump manufacturer's requirements and the requirements of the Health and Safety Executive Publication PM5.

A minimum static head of 1.6 m is required to overcome the boiler hydraulic resistance and give a reasonable safety margin. This requirement is specific to the boiler but installed systems must also comply with Health and Safety Executive Guidance Note PM5. In those cases with minimum static head available it will be necessary to fit a further overheat thermostat in the mixed flow from the boiler set at 90^{0}C and wired to terminals S2 and S3 in the wiring centre.

Note: *In some cases pump manufacturers will require a head as high as 12 m (40 ft), This must be allowed for the minimum head increase accordingly.*

See Fig.14 for further clarification

All dimensions in mm (in.)

1. Roof top or single storey applications

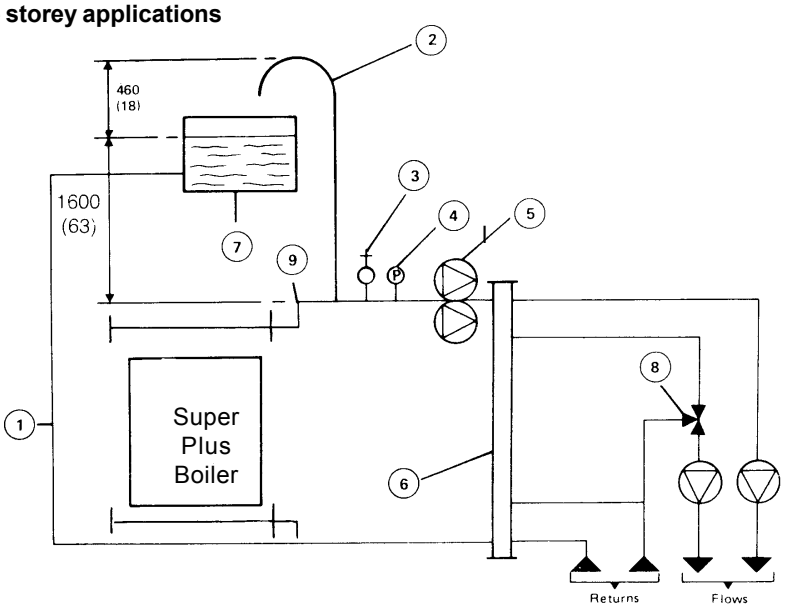

LEGEND

1. Cold feed (size must comply with BS 6644)
2. Open vent (size must comply with CP:332:3)
3. Safety valve
4. Water flow switch
5. Dual primary pumps
6. Mixing header
7. Feed expansion tank
8. Mixing valve
9. Highest point in system

2. Ground floor or basement applications

System Zones

Minimum head required by boiler, but additional head may be required by the pump manufacturer or to comply with Health and Safety Executive Guidance Note PM5

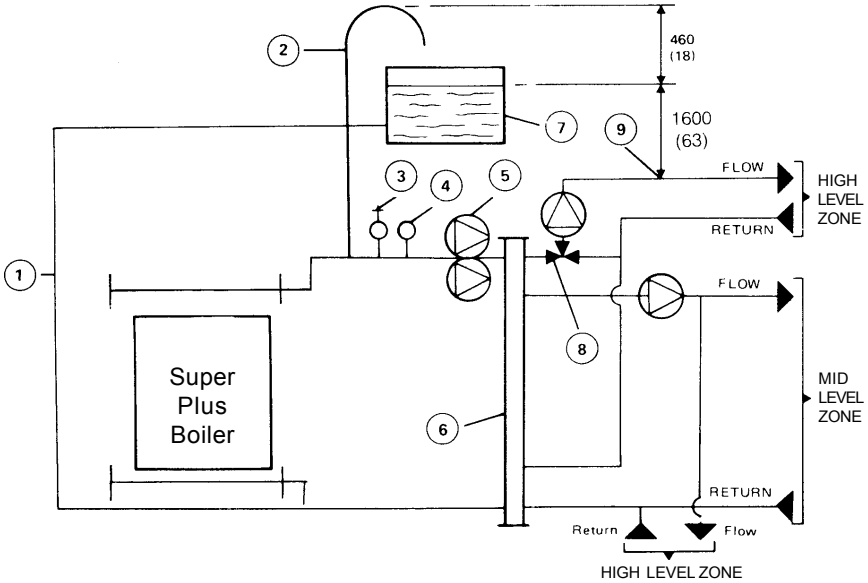

Fig.13 Guide to Minimum Requirements - Feed / expansion tank height & boiler primary circuit

Safety Valve:

A safety valve must be sized and fitted in accordance with BS.6644. The valve should be set at 0.7 bar (1 0 lb/in^2) above the available static head of water over the boiler.

The maximum safety valve setting is 0.7 bar (10 lb/in^2) above the maximum design operating head of 6.0 bar (85 lb/in^2, i.e. 6.7 bar (95 lb/in^2)

Pressure Gauge

The water pressure gauge and temperature gauge must comply with BS.6644.

Water flow switch

A water flow switch must be fitted to protect the boiler from pump failure.

Vent, Cold Feed

The open vent and cold feed pipe sizes must comply with BS.6644 and must be of the following minimum size:

Boiler	cold feed nom.dia(in)	open vent nom. dia(in)
200/S	1 1/4	1 1/2
300/3	1 1/2	2
400/4	1 1/2	2
300/3 alternative	1 1/2	2
400/4 alternative	1 1/2	2
500/5	1 1/2	2
600/6	1 1/2	2

The drain valve must comply with BS.2879 and be operated with a removable key.

GENERAL GUIDANCE ON APPLICATIONS

See Fig.13

Fig.13 is intended to provide basic information only on the application of the **Super Plus** Boilers.

It is essential that the water flow rates given above be maintained within the limits stated. Therefore, any compensating devices must not be connected to the boilers directly, but may be used in conjunction with a mixing header. The mixing header must be sized at least one size larger than the boiler flow and return manifold size; to avoid hydraulic interference between the boiler primary pump and system zone pumps.

The use of a mixing header means that compensating controls can be used to operate mixing valves on a variable temperature circuit, without affecting the water flow rate through the boiler.

Fig. 14 shows how constant and variable temperature circuit can be used on low and high head applications.

The following points should be noted:

1. The recommended positions of the cold feed and open vent are shown, sizes should comply with BS.6644:1986. If isolating valves are to be fitted in the flow and return pipes of the boiler they must not isolate the boiler from the open vent, safety valve or cold feed.
2. The minimum tank height shown is measured from the highest point of the system and must be increased, if necessary, to comply with pump manufacturers' requirements.
3. The open vent height above tank water level cannot be guaranteed adequate in all circumstances and does not take into account any instantaneous changes in head brought about by ancillary equipment operating.
4. Water flow switch is shown in its recommended position. It MUST NOT be located on the mixing header where operation of zone pumps can cause reduction in flow.
5. Production of condensate: When operating normally and the design return temperature has reached 70^{0}C the boiler produces virtually no condensate. At lower temperatures the amount of condensate increases. It is normal for condensate to be produced as the boiler heats up from cold and, provided the time taken for the return to reach 71^{0}C is not excessive, no harm will result.

   If, however, large quantities of condensate are produced for long periods, this can adversely affect burner performance and cause the control box to lock out.

If the water contents of a system is very large, it is advisable to switch on individual zones from cold, in sequence with a time delay sufficient to allow the boiler return temperature to reach 55^{0}C as quickly as possible.

The condensate drain should be run in accordance with British Gas Publication IM22.

ELECTRICAL SUPPLY

230 Volt 50 Hz Single Phase A.C.

Consumption:

450 Watts maximum per module (excluding remote alarms, etc.)

Note:

External wiring and any installer supplied remote warning lights MUST be in accordance with the I.E.E. (BS7671) Regulations and any local regulations which apply.

The method of connection to the mains supply should facilitate complete electrical isolation of the boiler.

Connection should be made via a fused double pole switch, or fused spur box, serving the boiler only and incorporating contacts with a separation of at least 3 mm in all poles. The point of connection should be readily accessible and adjacent to the boiler.

The water flow switch and any other overriding safety devices should be wired in series with the isolation mains supply to the boiler. Remote indication connections of 'Burner On', 'Lockout' and 'Overheat are provided in the sequence control wiring centres.

The loads should not exceed 1 amp resistive

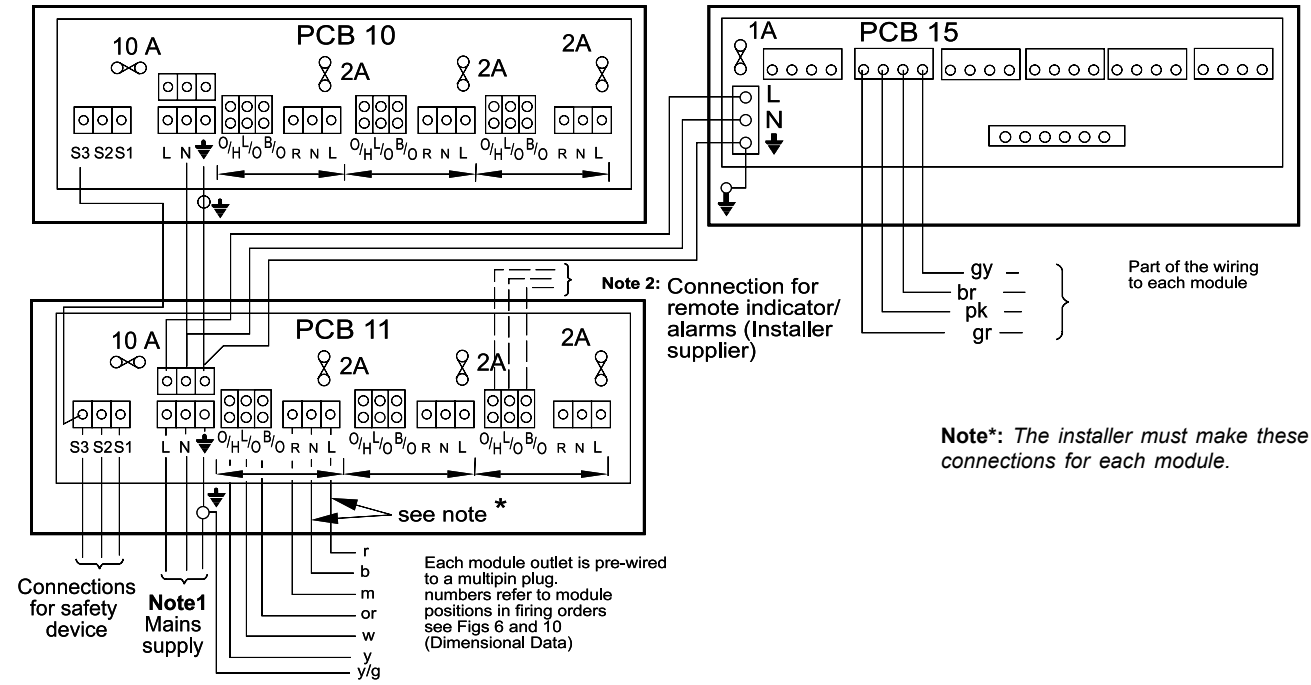

Note*: *The installer must make these connections for each module.*

Fig.14 Wiring for Boilers with a Wiring Centre

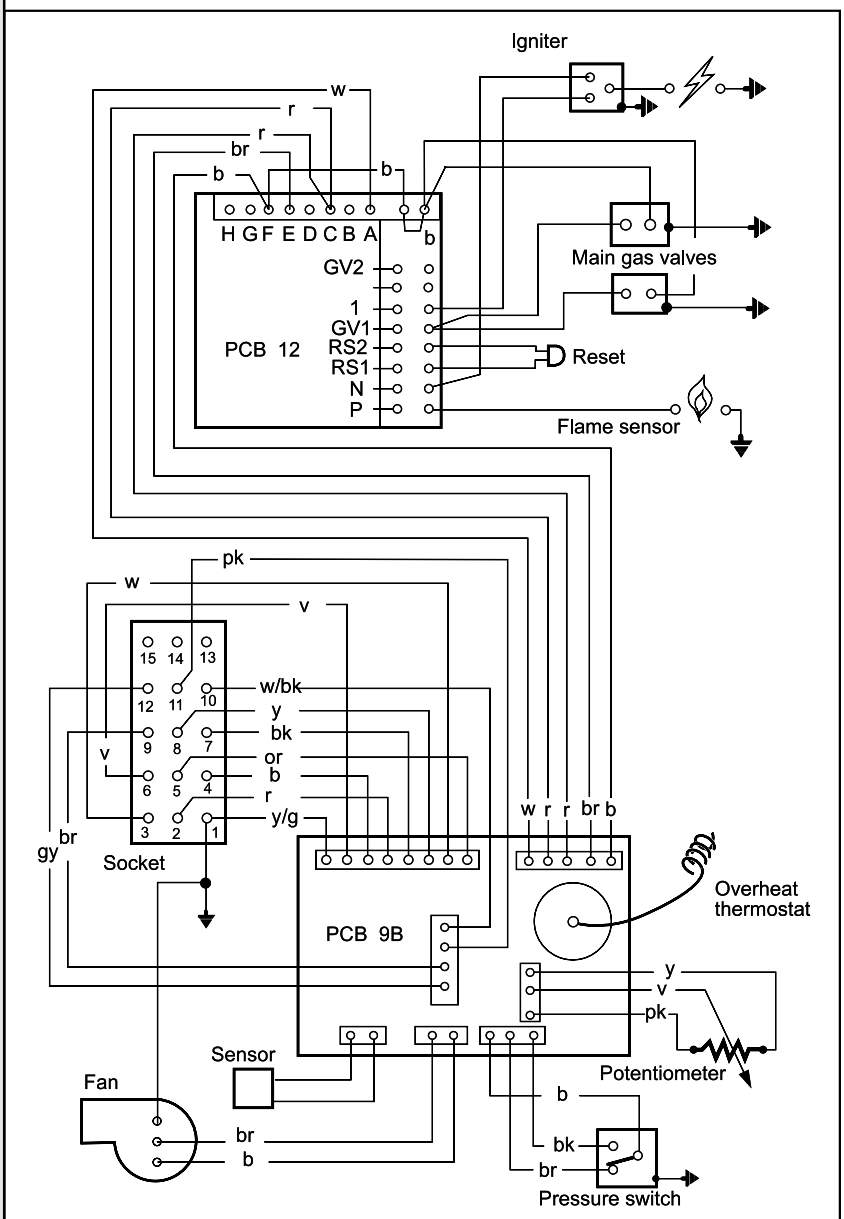

Fig.15 Boiler Module Internal Wiring

NOTES

1. *Isolate mains supply to boiler. All incoming earth connections must first be made to the earthing post inside the wiring centre casing.*
2. *Terminals S1, S2 and S3 provide facility for direct wiring of safety devices. The water flow switch should be connected between S1 and S2, and any other safety devices wired in series between S2 and S3. (Typical safety devices are: Air pressure switches, auxiliary switches on motorised valves, and safety relays activated by fire sensors). Terminal S2 is voltage free.*

   If no other safety devices are to be used, the water flow switch should be connected across S1 and S3. If all overriding safety devices are wired in series with the isolation mains supply to the boiler then link terminals S1-S3.

   The neutral connection must be taken from the installers junction box.
3. *These connections provide a 230 Volt AC supply outlet for remote indicators and alarms with a maximum lead of 1 Ampere.*

   O/H: becomes live when the module overheat cutoff device has operated.

   L/O: becomes live when the module has gone to lockout.

   B/O: becomes live when the module is running.

Note: *200/S does not employ PCB 10*

ASSEMBLY

PACKAGING

The boiler casing is supplied complete with insulation and feet, strapped to a packing base and shrink wrapped.

At site locations where access is restricted, the boiler casing can be split horizontally by removing the cable trunking insulation retaining trims and then the securing nuts, washers and screws. Re-assemble in reverse order.

On re-assembly, great care must be taken to ensure that the casing sealing strips are undamaged and correctly positioned. The water and gas headers are supplied on a pallet, shrink wrapped.

The water header flexible connections, flange and gaskets etc., are in the module fixing pack.

The modules are supplied individually packed on a pallet.

FOUNDATION

An insulated foundation is NOT necessary as the bottom of the boiler casing will not exceed a temperature of 60^{0}C (140^{0}F).

The foundation MUST be flat and level, fireproof, dust free and capable of supporting the weight of the WET boiler.

CASING AND DRAIN CONNECTION

A 22 mm copper street elbow is supplied in the water header hardware pack, for connection to the casing drain point. This elbow can be fitted in any direction and then the compressing nut tightened. A suitable drain should be connected to the elbow. Refer Fig. 17.

Note: *Condensation will only occur over the initial warming up period, when the return water temperature is below 55^{0}C (the flue products Dew Point).*

The boiler casing can now be placed in position.

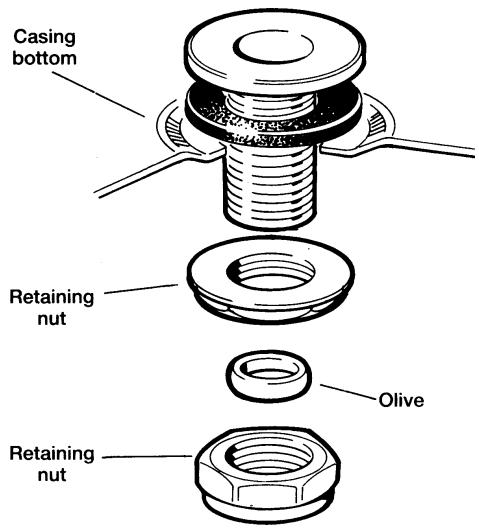

Fig. 16 Casing Drain Assembly

NOTE: EXTREME CARE MUST BE TAKEN WHEN HANDLING THE CASING, WHICH IS FITTED WITH AN ALUMINIUM FACED, INSULATING CLADDING. THIS CLADDING CAN BE KEPT CLEAN BY WIPING WITH A DAMP CLOTH.

ASSEMBLING THE MODULE AND WATER HEADERS TO THE BOILER CASING

Refer to Fig.1

WARNING: CRACKING MAY OCCUR IF THE FLOW AND RETURN MODULE CASTINGS ARE OVER-STRESSED.

The following procedure is to be adopted:

Remove the water flexibles from the module fixing pack and screw them into the appropriate, internally threaded, branches of the water headers - using a wrench on the hexagon at the end of the bellows (see Figs.6 to 10). When tight the flange on the bellows should finish approximately 600 mm from the top of the internally threaded branch and with the flange holes at 45^0 to the line of the water header. ***Under no circumstances must the flange or bellows be used for tightening.***

Undo the retaining screw from the front of the module upper cover and remove it by pulling forward and lifting slightly at the back to clear the shoulder nuts. Undo the screw at the base of the controls chassis and remove the lower cover by lifting it to clear the shoulder nuts and pulling it forwards.

Remove the module from the pallet by unscrewing its retaining screws. Offer up the module to the casing so that the square cutout lugs on the rear end plates sit over the runners within the casing, and push the module home.

Note: *Lift the module at the front by the water flow or return elbows; DO NOT LIFT VIA THE CONTROLS BOX OR GAS LINE.*

Fit the nuts and washers over the 4 fixing studs but do not tighten yet. Repeat for the remaining modules.

Remove the gas cock half of the union gas cocks on the gas line extensions (both solid and flexible) and screw them to the gas header. Ensure that the dimensions between the header and the end face of the gas cock halves are the same, and that the gas cocks will face forward when finally assembled.

Fit the end cap and the elbow to the gas header in the required positions.

It is important that a gas cock is fitted to the inlet gas pipe adjacent to the boiler.

Fit the solid and flexible gas line extensions to the top flange on the module gas train using the gaskets and screws provided. Place the gas header in position so that the union gas cocks can be reconnected - taking care to adequately support the header during assembly. Ensure that all swivel joints on the flexible extensions are tight.

Secure the flow and return water headers to the modules, rigid flanges first, using the gaskets and screws provided. Take adequate precautions to support the headers during assembly.

Note: *Care should be taken to avoid damage to the flexible connections whilst tightening the screws securing the flanges.*

Finally, tighten each of the modules 4 fixing nuts.

300/3 and 500/5 Boilers only (see Figs 9 & 10).
The RH bottom module water connections and gas connection must be blanked off.

A 1" BSP cap is supplied in the module fixing pack to seal the gas header connection.

The return water header support bracket is supplied in the water header pack. First remove the bottom and RH nuts and washers securing the casing blanking plate and use these fixings to secure the support bracket to the blanking plate.

Blank off the water return header connection, using the blank flange and the 2 gaskets supplied. (return water header - gasket - blank flange - gasket - support bracket). Blank off the water flow header connection using the 2" BSP cap and close taper point supplied.

400/4 Alternative Boiler only (Refer Fig.12)
The procedure to blank off the bottom RH module must be carried out as described for the 500/5 boiler above. In addition the centre bottom module opening in the casing must be blanked off.

First remove one of the M10 slotted nuts and backnut from the centre bottom module opening in the casing and replace by one of the longer studs in the blanking kit. Screw the MB threaded portion of the new stud through the cast support ring and through the hole in the interior support strut. Fit the M8 nut and washer from the back and tighten.

Repeat for the other 3 studs.

Take the round blanking plate supplied and fit it into the central bottom module opening in the casing. Secure it using the 4 M10 nuts and washers provided. Fit the blank flanges and gaskets to the return water header connection. Blank off the water flow header connection using the 2 in. BSP cap and close taper point supplied.

A 1" BSP cap is supplied to seal the gas header connection.

300/3 Alternative Boiler (Refer Fig.11)

The procedure to blank off the bottom RH module and the central bottom module must be carried out as detailed under 500/5 boiler and 400/4 Alternative boiler above. In addition the top right hand module opening in the casing must be blanked off.

First remove one of the four M10 slotted studs and backnut from the top right hand opening in the casing, and replace by one of the longer studs in the blanking kit. Screw the M8 threaded portion of the new stud through the cast support ring and through the hole in the interior support strut. Fit the M8 nut and washer from the back and tighten.

Repeat for the other 3 studs.

Take the round blanking plate supplied and fit it into the top right hand module opening in the casing. Secure it at the bottom and right hand sides using the M10 nuts and washers.

Secure the water flow header support bracket to the round blanking plate using the top and LHS fixings. Blank off the water flow header using the blank flange and the 2 gaskets supplied (flow water header, gasket, blank flange, gasket & support bracket)

A 1" BSP cap is supplied to seal the gas header connection.

Blank off the return water header connection using the 2" BSP cap and close the taper nipple supplied.

CONNECTING BOILERS TO THE FLUE SYSTEM

Details of the flue design are shown in Figs. 6 and 7.

The boiler socket and flue pipe sizes are given in Table 1.

WATER CONNECTIONS AND PRESSURES

Refer to 'Installation Requirements'

All service pipework, linking the flow and return headers, should be adequately supported, taking care that no strain is imposed upon them.

Allowance must be made for any additional service pipework expansion.

Provision for draining the boiler should be made at the lowest point in the system.

A safety valve MUST be fitted.

The valve should be set at 0.7 bar (10 lb/ in^2) ABOVE the available static head of water over the boiler or design operating pressure of the system, whichever applies, with a maximum value of 6.7 bar (95 lb/in^2)

If isolating valves are fitted in the flow and return pipes to the boiler, they must NOT isolate the boiler from the open vent, safety valve or cold feed.

The maximum safety valve setting is 0.7 bar (10 lb/in^2) above the maximum design operating head, or pressure of the boiler - 6.0 bar (85 lb/in^2)

ELECTRICAL CONNECTIONS

Refer to Fig.14

The mains input to the boiler must be wired into the terminals marked 'Mains' on the lower of the three wiring centres (printed circuit Board No.11) on the LHside of the boiler.

Terminals S1, S2 & S3 allow safety devices to be wired directly into the boiler. Thus the water flow switch should be wired between S1 & S2 and other devices wired between S2 & S3 (e.g., a fan diluted flue switch). Terminal S2 is voltage free.

If all safety devices are wired in series with the isolation mains supply then terminals S1 & S3 must be linked.

The length of the conductors between the cord anchorage and the terminals must be such that the current carrying conductors become taut before the earthing conductor, if the cable or cord slips out of the cord anchorage.

The live and neutral conductors for each module are disconnected and insulated within the wiring centre for safety purposes on leaving the works. These wires must be connected to the appropriate L and N terminal strip connections on printed circuit boards 10 and 11 within the wiring centre (see Fig.8 to 12 and Fig. 14) for each module.

If a 300/3 Alternative or 400/4 Alternative boiler is fitted, the unused module wiring must be left disconnected to ensure the module multipin plug remains electrically safe.

COMMISSIONING AND TESTING

The **Super Plus** boiler must be commissioned and tested by a competent person. In the case of installations covered by the Gas Safety (installation & Use) Regulations 1994, the engineer shall be CORGI registered.

Upon request, Caradon Plumbing Ltd., will provide a quote for commissioning or recommissioning after servicing.

FILLING THE BOILER WITH WATER

Fill the system by admitting water at the lowest point This will ensure air is forced from the tubes of the heat exchangers.

WATER CIRCULATION

Switch on the pump motor and check that water is circulating and the pump is vented.

Check the operation of the water flow switch. It should switch off the electrical supply to the modules when the water flow falls to NO MORE THAN one third of the design water flow-rate (given in Table 1).

HEADER GAS TIGHTNESS & PURGING THE GAS LINE

Turn the module gas service cock that is furthest from the gas inlet.

Connect the manometer to the tapping point at the end of the gas header (PTP No.1, Fig.19)

Slacken the nut on the 1" union, connecting the module to the gas header, and purge the gas header by turning the mains inlet gas tap on until gas is smelled. Retighten the union connection (see also IM/2). Turn off the module gas service cock and ensure that all other module gas service cocks are in the OFF position.

Take note of the manometer reading and turn off the mains inlet gas cock. A subsequent fall in pressure, after allowing for temperature stabilizing, indicates a leak between the mains inlet gas and individual module gas service which MUST be made good. The mains inlet gas can then be turned on again.

In all gas soundness checks, wait for 1 minute for temperature stabilisation and then check for pressure drop during the next 2 minutes.

CONTROL LINE GAS SOUNDNESS

Refer to Figs. 1, 4 & 19

Carry out the following tests on each module in turn.

Turn on the module gas service cock, and turn off the pilot gas cock.

Turn off the main inlet gas cock and observe the manometer pressure as above (at PTP No. 1).

To test the second main gas valve, remove the screw from the pressure test point at the outlet side of the first main gas valve (PTP 2) and connect a manometer via a 'T' piece, to the pressure test point at the gas header (PTP 1).

Close the main gas inlet cock and observe the manometer.

Any leakage from joints in the line or past the appropriate gas valve seats must be investigated and curved.

PREFIRING CHECK

Refer to Figs. 3 & 4

Ensure that the electrical supply to the boiler is off.

EXTREME CARE SHOULD BE TAKEN WHEN THE MODULE IS RUN WITHOUT A COVER.

Modules not being checked should have their multipin plug removed.

Each individual module should be checked as follows:

1. Turn the module gas service cock to OFF.
2. Plug in the module multipin electrical plug.
3. Switch ON the electricity supply to the boiler:

   The following sequence of events will occur:-

   (a) The module mains ON light will illuminate.

   (b) The fan will start and run for approximately 70 seconds. (part of the 5-volume air change safety feature). Then either the fan will continue to run for approximately 35 seconds or the fan will stop for up to 35 seconds depending on the module's position in the switching sequence then restart and run for approximately 35 seconds.

   (c) The ignition spark commences, continues for 4 seconds then ceases. (The spark can be seen through the sightglass in the module front).

   (d) At the end of the 4-second ignition period, the lockout light will be illuminated. The mains on light will remain illuminated and the fan will continue to run.
4. Turn off the electrical supply to the boiler. The lights will extinguish and the fan will stop.

FAN PERFORMANCE CHECKS

Connect a manometer to measure the pressure difference between the fan housing and the venturi casting.

The pressure tapping should be connected to the rear pressure test point on the pressure switch and the suction tapping to the front pressure test point on the pressure switch, (See Figs 2 & 4). If, when the fan is operated as above, the manometer reading is less than 5.5 mb then the commissioning cannot proceed.

If the pressure is low, check that the fan impeller blades are clean and free to rotate and that the venturi casting and burner are free from obstructions. (Refer to 'Servicing' for details of dismantling). Check also to see if the flue is unobstructed. Do NOT attempt to adjust the pressure switch, which is factory set.

FIRING CHECKS

Refer to Figs. 1, 3 & 4

Note: (i) The minimum gas pressure in the gas header should be as indicated in Table 1, with all modules firing. The maximum pressure should not exceed 25 mbar (10 in.w.g.).

(ii) The draught stabiliser should be set to control between neutral and 0.2 mbar (0.08 in.w.g.) draught in the casing, with one or all modules firing. A test point is provided in the boiler casing adjacent to the flue outlet socket.

Carry out the following firing checks on each individual module, commencing with the top left module and finishing with the bottom right. Ensure that the boiler is full of water and that the main and any shunt pumps are running. Modules not being checked should have their multipin plugs removed.

Switch on the electrical supply to the boiler. Wait for 15 seconds and then press in and release the lockout reset button.

The mains on light will be illuminated.

The fan will start and run for approximately 70 seconds (part of the 5-volume air change safety feature). Then depending on the modules position in the switching sequence, either the fan will continue to run for approximately a further 35 seconds or the fan will stop for up to 35 seconds and then restart and run for approximately a further 35 seconds.

Switch on the electricity supply to the boiler. The ignition cycle will recommence. After the pilot gas flame has been lit, the main gas valves will open and the main burner will ignite. The pressure should be 2.7 mbar; should adjustment be necessary then remove the screw cap on the main gas governor and screw the adjustment screw clockwise to increase, and anticlockwise to decrease the pressure. Switch the electricity supply to off and then on again to check the pressure settings.

On completion of adjustment replace all pressure tapping screws and the governor screw caps. Carry out the prefiring checks on all other modules.

SAFETY CHECKS TO BE CARRIED OUT ON ALL MODULES

Note: Pull out the multipin electrical plug from all modules not being tested.

1. Ensuring Lockout

With the module running, turn off the module gas service cock.

The burner will stop firing and the BURNER ON light will be extinguished with the LOCKOUT light being illuminated.

2. Combustion

Fire each module on its own, blanking off the fan air inlets of ALL the NON-FIRING modules, using the sheets of self-adhesive paper supplied with these Instructions.

Measure the CO and CO_2 content for each module - a sampling point is provided in the top of the boiler casing, adjacent to the flue outlet socket (Fig.1).

For DRAEGER Tests note the following:

(a) The sampling line, however short, should ALWAYS be purged.

(b) $C0_2$ tubes are marked in percent divisions and one pump ONLY is required (CO_2 tubes are also marked in divisions indicating parts per million (P.P.M)).

(c) The ratio CO/CO_2 should not exceed 0.001. For convenient reference Table 3 shows maximum p.p.m. CO levels in p.p.m (read direct from tube) related to various $C0_2$ levels. Low CO levels are included to cover the dilutions due to casing and flue volume on the larger boilers.

Remove the fan inlet blanking material from all modules and fire all modules together.

Measure the gas pressure at the gas header test point (PTP No.1, Fig.17) and ensure that it is not less than that indicated in Table 1.

Check also that the draught stabiliser is controlling the draught between neutral and 0.2 mbar (0.08 in.w.g.). With all modules firing, measure the CO and CO_2, levels again and refer to Table 3 for the maximum allowable CO content.

3. Pressure Switch

Switch off the electricity supply to the boiler. Pull out the black push-on connection, from the pressure switch at the right hand side of the controls box.

Switch on the electrical supply. The fan will run for 70 seconds and then for a further 35 seconds after a variable delay (as previously described), but at the end of this time the ignition sequence will not start.

Switch off the electrical supply and refit the push-on connection from the pressure switch.

4. Detector Current

The pilot and main burner flame detector current may be checked by breaking the in-line connector in the flame detector lead and inserting a micro-ammeter. The pilot current should be 3 - 4µ A and the main burner current 6 - 7µA

5. Overheat Cut-off Device

If the water flow rate through the boiler is adequate, the cut-off devices should not operate when the load on the boiler is GRADUALLY reduced from maximum to minimum.

The overheat cut-off device is reset by pushing in the 'OVERHEAT RESET' button.

Once commissioning has been completed, all module electrical multipin plugs should be refitted.

ADJUSTMENT OF SEQUENCE CONTROL

Thermometers mounted in the flow and return pipes to the boiler will give a check on the thermostat settings, and will indicate whether the water flow rate is correct to give a temperature rise across the boiler of 10°C to 12°C.

Each module's individual electronic thermostat should be set with reference to Table 4 and Fig.17 (which shows the boiler thermostat scale). The module numbers are given in Figs. 8 to 12.

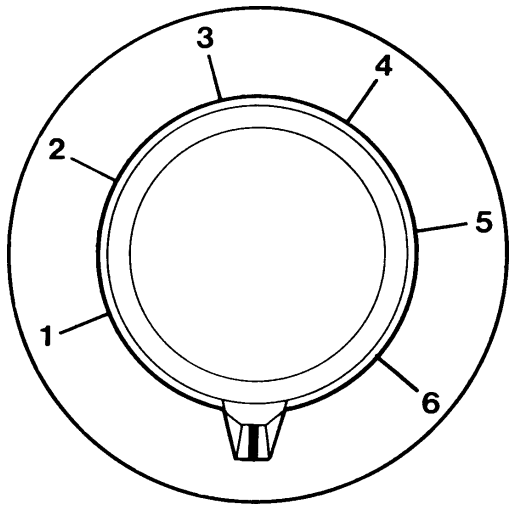

Fig.17 Boiler thermostat knob

This method of adjustment will give control of the flow temperature which will be adequate for most applications. For more accurate control Caradon Plumbing Ltd. can quote for a commissioning which can, if required, include the accurate calibration of the electronic thermostats.

Peel off the red adhesive vinyl arrow from the data plate on the right hand side of the boiler casing and reapply it to indicate the size of the boiler.

The combustion data sheet included at the end of this Installation book should be connected for each module and left attached to these Instructions.

Once commissioning has been completed, all module covers must be replaced.

Table 3 - MAXIMUM ALLOWABLE CO CONTENT

CO_2 (as read)	3.0	3.5	4.0	4.5	5.0	5.5	6.0	6.5	7.0	7.5	8.0	8.5	9.0	9.5	10.0	10.5
Max allowable CO p.p.m.(as read)	30	35	40	45	50	55	60	65	70	75	80	85	90	95	100	105

Once commissioning has been completed then all module covers should be replaced

Boiler Size/ module No.s	1	2	5	4	6	7
200/S	4	1				
300/3		5.1	3	1		
400/4	5.6	4	2.5	1		
300/3 Alternative			5.1		3	1
400/4 Alternative		5.8	4.6	3.4	2.2	1
500/5		5.8	4.6	3.4	2.2	1
600/6	6	5	4	3	2	1

Note: *module numbers refer to the order in which the modules are connected to the wiring centres (Figs. 8 to 13)*

SERVICING & FAULT FINDING

IMPORTANT: In order to ensure the safe and reliable operation of **SUPER PLUS** boilers it is essential that regular maintenance is carried out by competent staff who have received instruction in maintenance, fault finding and commissioning procedures for this boiler series. Inadvertent substitution or replacement of similar components particularly those with plug-in bases could cause a hazard.

SERVICING INSTRUCTIONS

ANNUAL servicing is recommended.

BEFORE CARRYING OUT ANY SERVICING PROCEDURE:

1 . ISOLATE THE BOILER ELECTRICAL SUPPLY.

2. TURN OFF THE GAS SERVICE TAP ON THE MODULE BEING SERVICED.

The following procedure should be carried out annually.

PREPARATION FOR SERVICING

(See Figs 2, 3 & 4)

Undo the retaining screw from the front of the module upper cover and remove the cover by pulling forwards and lifting it slightly at the back to clear the shoulder nuts. Pull out the multi-pin electrical plug from the side of the module.

Undo the screw at the base of the controls chassis and remove the lower cover by lifting it to clear the shoulder nuts and pulling it forwards.

Unscrew & remove ferrule (Fig.18) from spark electrode & disconnect ignition lead. Pull off in-line connector in the flame sensing probe lead.

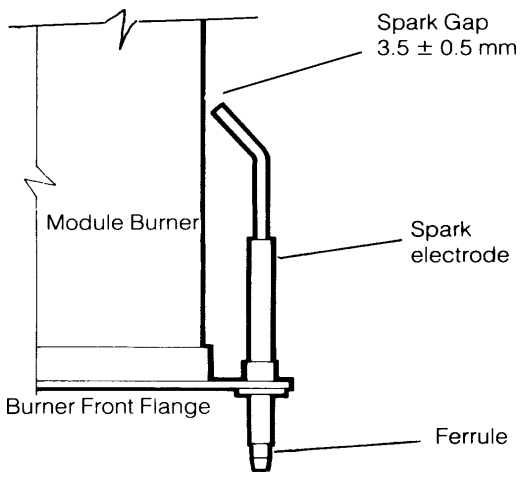

Fig. 18 Spark Electrode Setting

Undo the screws fastening the electrical plugs to the 2 main gas valves Pull out the plugs.

Unclip the fan motor lead and pressure switch lead from the clips on the controls chassis.

Pull out the split pin, retaining clip and overheat thermostat in the flow elbow, release the clip from the pocket in the return elbow and pull out the main thermostat sensor. Undo the suction sensing line connection at the venturi casting and at the pressure switch. Remove the line.

Undo the pressure sensing line connection at the base of the fan housing and at the pressure switch and remove the line. Pull out the 3 push-on connections and unscrew the earth connection from the pressure switch on the RHS of the controls box.

Take the weight of the fan and controls box assembly, undo the 4 nuts and washers securing it to the venturi casting and remove the assembly.

Pull off the venturi casting and gasket.

Remove the main burner-complete with the spark electrode and flame sensing probe.

Brush the inside and outside of the burner, making sure to clear any blockages in the burner.

Check the pilot wedge holes and make sure that they are clear,

If the burner shows any sign of deterioration it should be replaced.

Inspect the spark electrode and the flame sensing probe. If there is any sign of damage or erosion the part should be replaced.

Check the spark gap - it should be 3.5 ± 0.5 mm (Fig.18).

HEAT EXCHANGER

Inspect the dry side of the heat exchanger finned tubes via the burner opening, using a torch, and by removing the inspection panels on the sides of the boiler.

The inside of the heat exchanger can be brushed free of deposits, using a suitable brush.

Should the inspection indicate that a more thorough cleaning is required, necessitating the removal of the module from the boiler, then refer to 'MODULE CLEANING'. The burner opening in the top cover plate should be brushed free of any deposits.

CLEANING THE FAN

Undo the 4 screws retaining the fan housing to the controls box assembly and remove the housing. The fan impeller blades can now be cleaned using a soft brush.

CLEANING THE MODULE COVER FILTER

The module lower cover is fitted with a polyurethane foam filter which forms the bottom panel of the cover.

To remove the filter pull it from the module cover. Wash the filter in warm soapy water. It should then be thoroughly rinsed and left to dry.

RE-ASSEMBLY

Push the module filter back into its retaining slots on the underside of the module lower cover. Ensure that it is correctly positioned, i.e. with the stiffening framework to the bottom and the central U cutout in the framework to the rear. Refit the fan housing to the controls box assembly.

If any of the venturi cork gaskets are damaged or in any way unsound then the gasket must be replaced.

Carefully refit the burner to the module, ensuring that the extended gasket is between the module and burner.

Fit one of the square gaskets and then the venturi casting over the 4 studs. Ensure that the venturi is correctly positioned, i.e. with the suction sensing line connection on the left hand side and with its larger face towards the front. Refit the fan and controls box assembly ensuring that the other square gasket is fitted between the fan housing and the venturi casting. DO NOT OVERTIGHTEN the elongated M8 studs or damage to the casting may occur.

Both pressure and suction sensing lines should be blown through to free them from possible obstruction.

Refit the pressure sensing line to the pressure switch rear connection and to the fan housing connection. Refit the suction sensing line to the venturi casting and to the pressure switch front connection.

Reconnect the 3 push-on connections from the pressure switch on the side of the controls box carefully observing the correct positioning. In particular NEVER connect the black wire to the blue connection. Refer to Fig.3.

Secure the 2 main gas valves and gaskets (with the white cables), securing them with the screws; the pressure switch earth connection. Reconnect the spark electrode lead and screw down

the ferrule. Refit the inline connector of flame sensing lead.

Resecure the pressure switch lead and fan motor lead, to the clips in the control chassis. Ensure all connections are tight.

Refit the overheat thermostat coil into its pocket on the flow header and secure with the retaining strip and split pin. Refit the control thermostat sensor into the pocket in the return elbow and push it fully home, securing it with the retaining clip. Replace the module multipin electrical plug.

MODULE CLEANING INSTRUCTIONS

If the inspection of the dry side of the heat exchanger has shown that a thorough cleaning is required, it is necessary to remove the module from the boiler.

Preparing the Boiler

1. Undo the retaining screw from the front of the module upper cover and remove it by pulling forwards and lifting slightly at the back to clear the shoulder nuts,
2. Pull out the multipin electrical plug from the side of the module.
3. Undo the screw at the base of the controls box and remove the lower cover by lifting it to clear the shoulder nuts and pulling it forwards.
4. Isolate the boiler from the flow and return water pipes and drain the boiler.
5. Remove the fan and controls box assembly, venturi casting and burner, as described under Servicing. Uncouple the flanges connecting the modules to the flow and return water headers.
6. It may be necessary to remove the flow and return elbows from the module front plate to release the flange gaskets. The elbows should then be replaced for lifting purposes, after ensuring that the gaskets between the elbows and the front plate are sound.
7. Isolate the electrical supply to the boiler and remove from the wiring centre the appropriate fuse controlling the module, to ensure that the module multipin plug is electrically isolated.
8. Remove the 4 screws securing the module gas inlet flange. Slacken the union nut on the module gas cock. Undo the 4 nuts securing the module to the boiler. Withdraw the module to be cleaned from the boiler.
9. Take care as the module will not be completely empty of water.
10. In order to provide continual support for the water flow and return headers and the gas header, it is advisable to remove only one module at a time from the boiler.
11. Undo the 3 screws holding the gas distribution screen round the finned tubes and remove it.
12. The finned tubes can now be thoroughly brushed clean from both inside and out, using a suitable brush.
13. Re-assemble the gas distribution screen, ensuring that the slots in the screen are in line with the outermost point of the finned tubes.
14. Re-assemble the module to the casing and refit the water and gas flanges.
15. Refit the burner venturi casting, fan and controls box assembly, as described under 'Servicing'. All damaged gaskets must be replaced.
16. Retighten the module gas cock union.
17. Repeat the cleaning procedure for other modules as necessary.

MODULE WATERWAYS

The procedure below details the method of draining down the boiler, removing a module and dismantling for inspection of the waterways.

1. Remove the module from the boiler, as previously described and remove all fittings from the module cast iron top plate.
2. Remove the 16 x M10 screws and the 9 central M8 screws which secure the cast iron top plate to the aluminium top tube plate and lift the top plate off.
3. The waterways can now be examined.

If the tubes are scaled or partially blocked then the module must be cleaned, either by replacing the module into the boiler and cleaning all the modules at the same time, or individually.

Note: the heat exchanger is of aluminium and so any chemical descaling must be suitable for aluminium. Advice on the procedure for descaling the waterways can be obtained from specialists such as Fernox, Fry Technology UK, Tandem House, Marlowe Way, Beddington Farm Road, Croydon. CRO 4XS, tel. 0870 5601 5000 - or - Betz Dearborn Ltd., Sentinel Division, Foundry Lane, Widnes, Cheshire WA8 8UD, tel. (0151) 424 5351

Re-assembly

1. New gaskets should be used between mating flanges. The gaskets should be lightly greased before use.
2. Tighten the central 9 x M8 screws evenly to a torque of 24.4 to 27 N/m (18 to 20 ft lb). This maximum torque must not be exceeded.
3. Tighten the 16 outer M10 screws evenly to a torque of 48.8 to 54 N/m (36 - 40 ft lb). This maximum torque must not be exceeded.
4. Reassemble the boiler as previously described.

UPON COMPLETION OF A SERVICE OPERATION:

RE-COMMISSION AND TEST THE BOILER IN ACCORDANCE WITH THE COMMISSIONING AND TESTING INSTRUCTIONS WITH PARTICULAR REFERENCE TO THE FAN PERFORMANCE CHECKS.

REPLACEMENT OF COMPONENTS

WARNING:

Before working on the appliance:

1. Isolate the boiler electrical supply.
2. Turn off the gas supply at the inlet gas cock.

Note: To replace the following components first undo the retaining screw from the front of the module upper cover. Remove the cover by pulling forwards and lifting slightly at the back to clear the shoulder nuts.

Pull out the multi-pin electrical plug from the side of the module. Undo the screw at the base of the controls chassis and remove the lower cover by lifting it to clear the shoulder nuts and pulling it forwards.

Sight Glass

1. Undo the 2 screws securing the sight glass assembly to the front header casing.
2. Fit the replacement sightglass, ensuring the parts are in the correct order, i.e. gasket, glass, gasket and frame.
3. Retighten the 2 screws to ensure an airtight seal.
   DO NOT OVERTIGHTEN.

Control Thermostat Sensing Probe

1. Pull out the overheat thermostat coil, retaining clip and split pin from its pocket in the flow elbow. Undo the 2 screws securing the 2 halves of the control box and carefully lower the front half.
2. Pull out the control thermostat sensing probe and retaining clip from its pocket in the return elbow and undo the strain relief bush from the controls box back panel.
3. Unplug the lead from the printed circuit board 9B, inside the controls box, and remove the sensing probe.

4. Carefully fit the new probe; note that the plug will only fit its correct socket.
5. Refit the strain relief bush, ensuring that the probe is pushed fully home in its thermostat pocket. Retain it with its retaining clip.
6. Refit the overheat thermostat coil to its pocket in the flow elbow and secure with its retaining strip and split pin.

Control Thermostat Potentiometer

1. Unplug the potentiometer lead from the PCB 9B, inside the controls box.
2. Slacken the small securing screw in the control knob and pull it off.
3. Undo the backnut and washer securing the potentiometer to the control box and remove it.
4. Fit the new potentiometer, ensuring that the locating lug is correctly positioned in the hole in the controls box.
5. Refit the plug into the printed circuit board and replace the control knob.

Spark Electrode / Flame Sensing Probe

1. Unscrew and remove the ferrule (Fig.19) from the spark electrode and disconnect the ignition lead. Pull off the inline connector in the flame sensing probe lead.
2. Remove the screw securing the electrode / probe to the burner front plate and pull out the electrode / probe.
3. Carefully fit the new item and reconnect the leads. If applicable check that the spark gap is 3.5 ± 0.5 mm (Fig.19).

Printed Circuit Boards No.8 and No.12

Pull out the overheat thermostat coil, retaining strip and split pin from its pocket in the flow elbow.

Undo the 2 screws securing the 2 halves of the controls box and carefully lower the front half.

Board No.9

1. Unplug from board No.9
   (a) the wiring from the module multipin socket.
   (b) the wiring from the top of printed board No.12
   (c) the pressure switch
   (d) the fan
   (e) the control thermostat potentiometer
   (f) the control thermostat sensor.
2. Without exerting undue pressure, undo the 4 screws securing PCB 9 to the controls box and remove it, feeding the overheat thermostat capillary through the grommet in the right hand side.
3. Carefully fit the new Board, ensuring that the neons lockout reset button and overheat thermostat reset button fit through their respective holes without damage.
4. Unwind the overheat thermostat capillary and feed it through the grommet in the right hand side.
5. Refit the 6 plugs into the new board. Note that each plug will only fit its correct socket, though care must be taken to fit the fan plug into the socket marked 'BLOWER'.

Board No.12

1. Slacken the 8 terminal strip connections at the rh side and the 8 at the bottom of Board No.12 and those terminals at the top marked 'A' to 'H' only. Remove both top and bottom terminal strips from the board.
2. Remove the Board by squeezing in the retaining barbs on the 4 supports.
3. Fit the new Board by relocating the connections into the right hand side terminal strip and pushing the board home on its 4 supports.
4. Fit the top and bottom terminal strips ensuring that the 10-way strip is at the top and the 8-way is at the bottom. Tighten all terminal strip connections.

Re-assembly

1. Lift up the controls box front and refasten it using the 2 screws.
2. Refit the overheat thermostat coil and retaining strip to the pocket on the flow header and secure with its split pin.

Overheat Thermostat

1. Pull the overheat thermostat coil, retaining strip and split pin from the pocket in the flow elbow.
2. Undo the 2 screws securing the 2 halves of the controls box and carefully lower the front half.
3. Remove printed circuit board No.9B as described above.
4. Pull off the 2 push-on connections to the overheat thermostat and undo the 2 screws, nuts and washers securing the thermostat body to remove it.
5. Fit the new thermostat and reconnect the push-on connections.
6. Refit printed circuit Board No.9B, as described above, ensuring that the overheat thermostat capillary is fed through the grommet on the right hand side.
7. Lift up the controls box and refasten it using the 2 screws.
8. Refit the overheat thermostat coil into its pocket in the flow elbow and secure it with its retaining strip and split pin.

Burner

1. Unscrew and remove the ferrule (Fig.I9) from the spark electrode and disconnect the ignition lead. Pull off the in-line connector in the flame sensing probe lead. Undo the pressure switch earth lead.
2. Undo the screws fastening the electrical plugs to the 2 main gas valves and pull out the plugs and gaskets.
3. Pull out the control thermostat sensing probe and retaining clip from its pocket in the return elbow and the overheat thermostat coil, retaining strip and split pin from its pocket in the flow elbow.
4. Undo the suction sensing line at the venturi casting and at the pressure switch. Remove the line.
5. Undo the pressure sensing line union connection at the base of the fan housing and at the pressure switch. Remove the line.
6. Pull out the 3 push-in connections from the pressure switch on the rhside of the controls box. Unclip the pressure switch lead and the fan motor lead from the clip on the controls chassis.
7. Take the weight of the controls box and fan assembly, undo the front nuts securing it to the venturi casting and remove it. Pull off the venturi casting gasket.
8. Remove the main burner complete with spark electrode and flame sensing probe.
9. Remove the screws securing the electrode and probe and transfer them to the new burner,
10. ***Note:*** *they can only be assembled one way round. Replace any worn or damaged gaskets.*
11. Fit the new burner, ensuring that the extended gasket is in place between the burner and module front plate.
12. Reassemble in reverse order, ensuring that a gasket is in place between the burner and venturi casting and between the venturi casting and fan and controls box assembly, and that the M8 nuts are not overtightened. Ensure that the gaskets are in place before refitting the main gas valve plugs.
13. Refit the overheat thermostat coil into its pocket on the flow header and secure with its retaining strip and split pin.

14. Refit the control thermostat sensor into the pocket in the return header and push it fully home securing it with its retaining clip.
15. Ensure that the pressure switch connections are correctly made to the side of the controls box. In particular NEVER connect the black wire to the blue connection.

Gas Distribution Screen.

1. Remove the heat exchanger from the casing as described in 'MODULE - CLEANING INSTRUCTIONS'
2. Undo the screws securing the gas distribution screen and remove the screen.
3. it the replacement screen ensuring:
   (a) The slots in the screen are in line with the outermost points of the finned tubes.
   (b) The screen is held tightly against the finned tubes when the securing screws are tightened.
4. Re-assemble in reverse order to removal, renewing any damaged or deteriorated gaskets as necessary.

Module Cover Filter

Pull the filter out from the bottom cover. Fit the new filter ensuring that it is correctly positioned with the stiffening framework to the bottom and central U cutout in the framework to the rear.

Wiring Centre (PCBs 10,11 or 15)

1. Undo the 4 screws securing the wiring centre cover and remove the cover.
2. Disconnect the electrical leads from the printed circuit board and earth posts - noting their positions - Refer to Fig.15.
3. Undo the 4 screws securing the printed circuit board and remove the Board.
4. Fit the new board and reconnect the wiring (fig.15). Refit the wiring centre cover and secure with the 4 screws and washers.

Fan

1. Remove the fan and controls box assembly as previously described under 'Burner'.
2. Pull out the 2 push-on connections from the fan to the right hand side of the controls box and undo the earth connection.
3. Undo the 4 screws securing the fan housing to the controls box assembly and remove it. Using an Allen key, undo the screw securing the fan impeller to the fan and remove the impeller.
4. To remove the fan motor, undo the 2 screws securing it to the assembly.
5. Fit the new part and reassemble in reverse order.
6. Care must be taken when refitting the fan impeller to ensure that it does not foul the fan housing. If appropriate, unscrew the pressure sensing probe fitting from the base of the old housing and fit it to the new housing, If either sealing gasket is damaged or deteriorated it should be replaced

Spark Generator

1. Pull the overheat thermostat coil, retaining strip and split pin from the pocket in the flow elbow.
2. Undo the 2 screws securing the 2 halves of the controls box and carefully lower the front half.
3. Pull out the spark electrode lead from the spark generator. Unscrew the generator earth connection and the 2 electrical connections at the terminal strip on the RH side of PCB No.12
4. Undo the 2 screws securing the generator to the controls box and remove it.
5. Fit the generator and reassemble in reverse order.

Main Gas Valve / Main/Governor

1. Undo the screws securing the electrical plugs to the main gas valves and pull them out, complete with gaskets.
2. Undo the iron union in the main gas train. Undo the 4 screws, nuts and washers securing the main gas train flange and remove the train complete.
3. The gas valve(s) or governor can now be unscrewed and replaced. Ensure the arrow on the replaced part points in the direction of gas flow. Use approved jointing compound on all gas joints.
4. Check that, if the first main gas valve is to be replaced, the new valve comes complete with the inlet strainer and a pressure test point.
5. Reassemble in reverse order.

Pressure Switch

1. Pull off the 3 push-on connections on the side of the control box and undo the earth connection.
2. Unclip the pressure switch lead from the clip on the controls chassis. Undo and remove the suction sensing line between the pressure switch and the venturi casting. Undo and remove the pressure sensing line between the pressure switch and the fan housing.
3. Unscrew the brass fixing nut holding the pressure switch to the module bottom bracket and remove it.
4. Fit the new pressure switch and reassemble in reverse order. Ensure that the push-on connections on the pressure switch lead are correctly made to the side of the controls box. In particular NEVER connect the black wire to the blue connection.
5. If the electrical wiring inside the pressure switch is disturbed it is essential that it is reconnected correctly:

   Blue wire to Common connection marked COM

   Black wire to Normally Open connection marked NO

   Brown wire to Normally Closed connection marked NC

   Earth wire to Screw connection marked ⏚

Main Burner Injector

1. The main burner injector is a screw fit into the end of the main gas line. Unscrew the injector and discard it.
2. Fit the new injector.

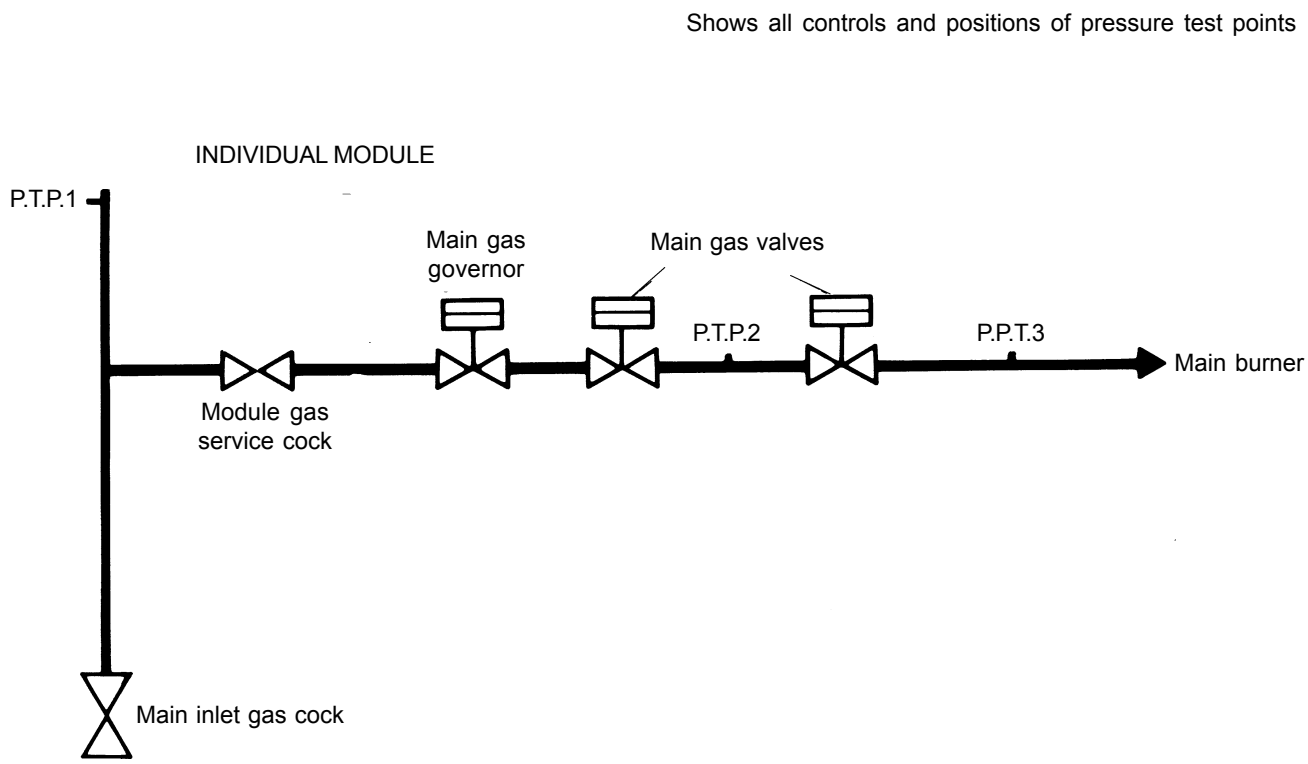

Fig.19 Diagram of Gas Supply Manifold

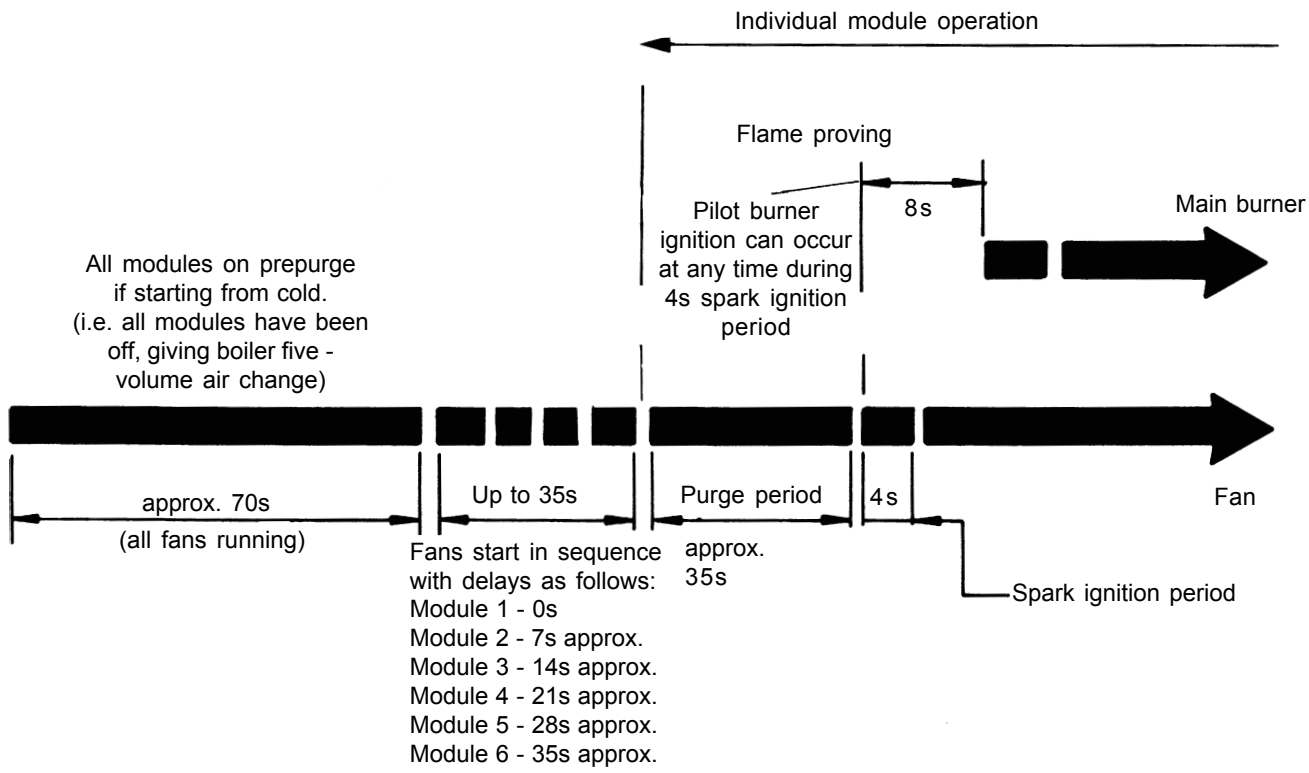

Fig.20 Control Sequence Logic

FAULT FINDING

MODULE 'MAINS ON' LIGHT NOT ILLUMINATED

Check that:

i) External fuses are intact and that the external controls are calling for heat.

ii) There is mains electrical supply (230V) at both S3 terminals on PCBs 10 and 11 in the wiring centre (see Fig.14), and that the wiring centre fuses and connections are sound.

iii) All connections are sound in the module multipin plug and in the control box; there is mains electrical supply (230V) at terminals 2 and 4 in the multipin plug (Fig.14)

Replace parts (as appropriate) PCBs 11, 10, 15 or 9.

FAN DOES NOT START

Check that:

i) Module thermostat is calling for heat. Note that at any particular time the return water temperature may be higher than the individual module thermostat setting; module is not out on overheat if so press in overheat reset button and see Fault Finding No.8)

ii) There Is electrical continuity between the brown and blue pressure switch connections (note that these wires carry 230V); pressure and suction lines and connections are sound.

ill) There is mains electrical supply (230V) to the fan motor and that fan impeller is free to rotate (note that the fan motor is fitted with a thermal trip, so if impeller is jammed, free it and allow time for the motor to cool)

iv) Connections are sound in the control box

Replace parts (as appropriate) fan motor, PCB 9B, pressure switch and thermostat sensor.

IGNITION SEQUENCE DOES NOT START

Check that:-

i) The normal boiler operation is that where no modules are firing, all module fans will start and run for a minimum of 70 seconds and then, depending on the module's position in the firing sequence, the fan will stop for a delay varying between 0 second and 35 seconds, after which the fan will run for approximately a further 35 seconds. Only then will the ignition sequence start.

ii) The 'lockout' light is not illuminated: if it is wait for 15 seconds and then press in and release the lockout reset button.

iii) All connections are sound at the control box and the pressure switch, and that the fan is operating.

iv) The pressure switch differential pressure is >5.5 mb. If not check the fan impeller, cast venturi, pressure and suction lines, burner, module heat exchanger or flue for blockage or leakage.

v) There is electrical continuity between the blue and black pressure switch connections (note that these wires carry 230V)

vi) The flame probe circuit has not shorted to earth. Replace parts (as appropriate). Pressure switch, flame probe, PCBs 9B and 12.

NO SPARK AT IGNITION ELECTRODE

Check that:

i) The ignition electrode and lead are sound and that all connections are clean and tight and there is no arcing anywhere but at the spark gap.

ii) The electrode spark gap is 3.5 ± 0.5 mm (Fig.l7)

iii) There is mains electrical supply (230V) at the spark generator at the correct time during the ignition sequence (Fig. 19)

Replace parts (as appropriate) spark generator, ignition electrode and feed or PCBs 13, 12, or 9B

MAIN BURNER DOES NOT STAY ALIGHT

Check that:

i) The pilot flame detector current is approximately 6µA by breaking the inline connector in the flame detector lead and inserting a micro-ammeter.

ii) That all connections are sound in the control box and flame detector lead.

iii) The flame detector and electrode is sound and correctly connected.

Replace parts (as appropriate) flame detector electrode and flyaway lead, flame detector lead, PCBs 13, 12 or 9B or main burner complete with pilot pipe.

MAIN BURNER DOES NOT LIGHT

Check that:

i) Main burner pressure is 2.7 mbar, and that main burner injector is clean and undamaged.

ii) There is mains electrical supply (230V) at both main gas valves and that both gas valves are open.

iii) There is a minimum dynamic gas inlet pressure available.

Replace parts (as appropriate) main gas governor, main gas valves, PCBs 12 or 9B or main gas injector.

MODULE OUT ON OVERHEAT

Check that:

i) Water temperature difference across module when it is firing is 10 - 12°C. Adjust water flow rate as necessary.

ii) Main thermostat sensor is pushed fully home in its pocket and is secured with its retaining clip.

iii) Overheat thermostat is operating at its correct setting of 100°C.

Replace parts (as appropriate) overheat thermostat, control thermostat sensor, control thermostat potentiometer or PCB 9B.

SHORT LIST OF PARTS

Key No.	Product Code No.	Description
11	110 536	Burner Assembly Complete
12	1333 726	Burner Bar (Bray)
13	110 526	Ignition Electrode
14	134 727	Sensing Electrode
15	013 760	Burner Cork Gasket
18	110 539	Fan and Controls Assembly
21	133 058	Fan Motor
22	057 841	Sight Glass
23	057 973	Sight Glass Frame
24	057 840	Sight Glass Gasket
25	133 070	Pressure Switch Assembly
27	013 764	Main Gas Line Injector
28	013 842	Main Gas Line Solenoid Valve (ASCO)
29	111 566	Main Gas Line Solenoid Valve with Strainer (ASCO)
30	113 204	Main Gas Line Govenor
	058 511	Potentiometer Assembly
	013 755	Sensor Assembly
41	-	Module Control Centre
42	004 038	Overheat Thermostat with Manual Reset LM5
43	133 133	Printed Circuit Board Assembly PCB. 9
44	013 241	Control Knob - Bulgin
46	013 755	Control Thermostat Sensor
47	058 511	Control Termostat Potentiometer Assembly
49	134 713	Reset Switch Assembly
51	134 515	Spark Generator Assembly
52	013 750	Printed Circuit Board PCB. 12
54	133 125	Module Surround Assembly, Top
55	133 126	Module Cover Assembly, Lower
56	132 002	Module Cover Filter
65	013 868	Printed Circuit Board PCB 15
	154 470	Wiring Centre Assembly PCB. 11 200/S
	134 463	Wiring Centre Assembly PCB. 11 300/3
	133 464	Wiring Centre Assembly PCB. 11 400/4
	134 465	Wiring Centre Assembly PCB. 11 500/5
	134 466	Wiring Centre Assembly PCB. 11 600/6
	134 459	Wiring Centre Assembly PCB. 10 300/3, 400/4
	134 460	Wiring Centre Assembly PCB. 10 500/5, 600/6
	154 326	Boiler Casing Assembly Complete 200/S
	133 270	Boiler Casing Assembly Complete 300/3
	133 271	Boiler Casing Assembly Complete 400/4
	133 272	Boiler Casing Assembly Complete 500/5
	133 273	Boiler Casing Assembly Complete 600/6

COMBUSTION DATA SHEET

1. BOILER MODEL (see Data Plate) please tick appropriate box

200/S ☐ **300/3** ☐ **400/4** ☐ **300/3A** ☐ **400/4A** ☐ **500/5** ☐ **600/6** ☐

		MODULE NO.						ALL MODULES FIRING
		1	2	3	4	5	6	
2. Pilot Burner Pressure (Note. 1)	in. w. g/bar							
3. Pilot Burner Pressure Note. 1 (all modules firing)	in. w. g/bar							
4. Thermal rating (i) Volume of gas, cubic. (Note. 1)	ft/litres							
(ii) Time for volume, (Note. 1)	seconds							
(iii) Heat input' (Note. 1)	Btu/h/kW							
{ (1) (2) x CV x 3600 { (1) (2) x CV x Note 3)	Note 2 }							
5. Combustion Data measured at sampling point at top of boiler (see Table 3)	(i) CO%							
	(ii) CO%							
	(iii) CO/CO_2							
6. Pressure Switch Differential (Note. 1)	in. w. g/bar							

Note 1: Delete units as appropriate

Note 2: CV is 1031 Btu/cubic ft if volume is measured in cu ft and gives heat input in Btu/h.
CV is 387.7 kJ/l if volume is measured in litres and gives heat input kW

Technical Training

The Caradon Plumbing Limited Technical Training Centre offers a series of first class training courses for domestic, commercial and industrial heating installers, engineers and system specifiers.

For details of courses please ring: *01270 413624*

Caradon Plumbing Limited pursues a policy of continuing improvement in the design and performance of its products. The right is therefore reserved to vary specification without notice.

CE

March 2000 110531 A07

Ideal BOILERS

Caradon Plumbing Limited, P.O. Box 103, National Ave, Kingston upon Hull, HU5 4JN. Telephone: 01482 492 251 Fax: 01482 448 858. Registration No. London 322 137. Registered Office: National Avenue, Kingston upon Hull, HU5 4JN. *A subsidiary of Caradon plc*

Ideal Installer/Technical Helpline: 01482 498376